STORM SYSTEM DETAILS

INDX.DWG

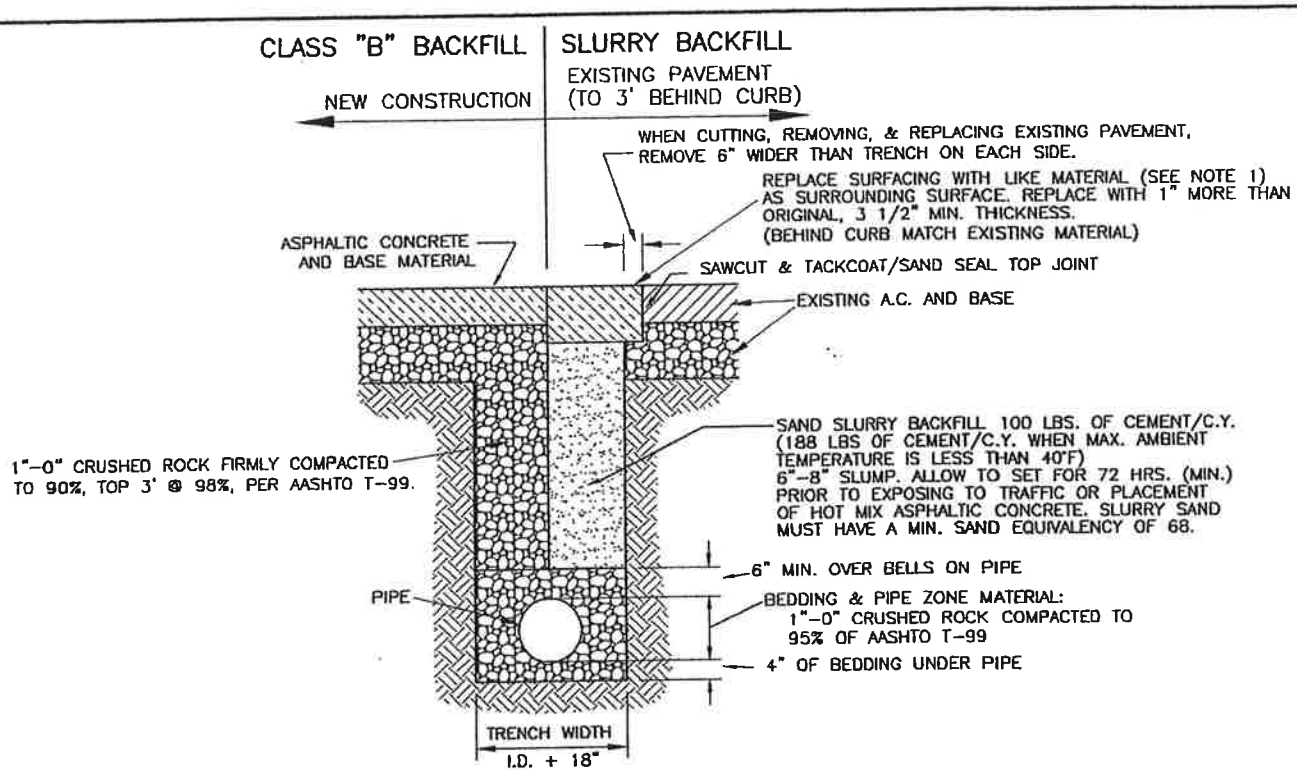

TRENCH DETAIL
UNDER PAVED AREAS

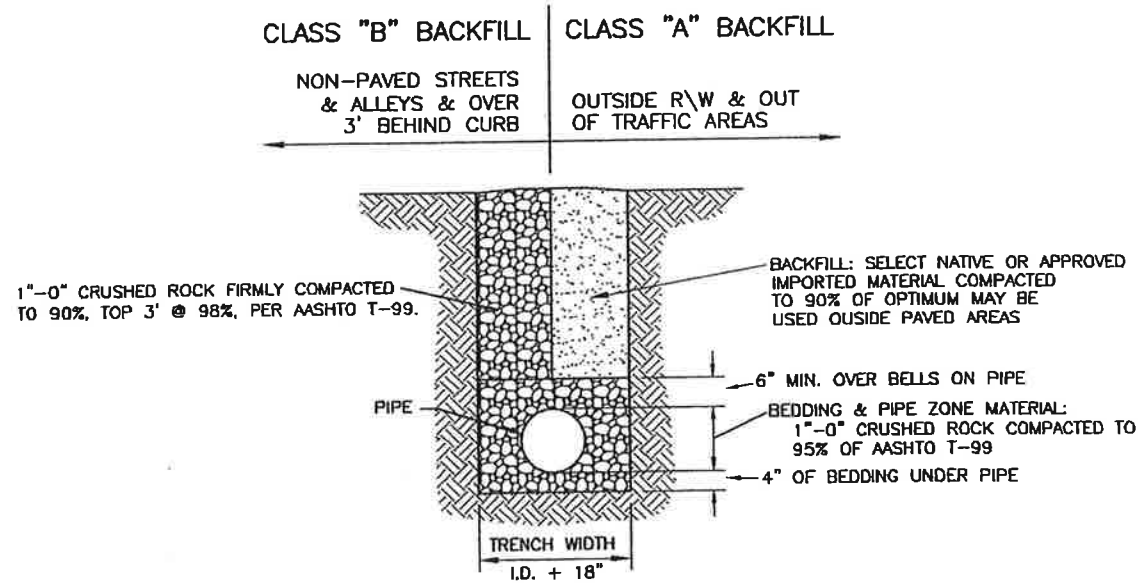

TRENCH DETAIL
OUTSIDE PAVED AREAS

NOTES:

1. COLD MIX AC MAY BE USED AS TEMPORARY PATCH ONLY.
2. ALL STEEL TRAFFIC PLATES IN TRAVELED AREAS MUST BE "RAMPED" WITH COLD MIX AC TO ALLOW SMOOTHER TRANSITION.
   a) MINIMUM 12" LAP OF STEEL PLATES ONTO EXISTING PAVEMENT.
   b) MINIMUM 3/4" STEEL PLATE THICKNESS.
   c) A PERMIT IS REQUIRED ON ALL STREET CUTS.
3. MINIMUM STORM DRAIN PIPE SHALL BE 12" DIAMETER
4. INSTALL TRACER WIRE ON ALL NON-METALIC PIPE, COLOR CODE PER U.P.C.

NO.	DATE	INITIAL	REVISIONS
1	07/05	BWD	COMPATION REQ.

DESIGN: | DRAWN: | APPROVED: 2001

CITY OF EAGLE POINT
ENGINEERING DEPT.

TRENCH DETAILS

SCALE: NONE | DWG. NO. EP-300

EP-300.DWG

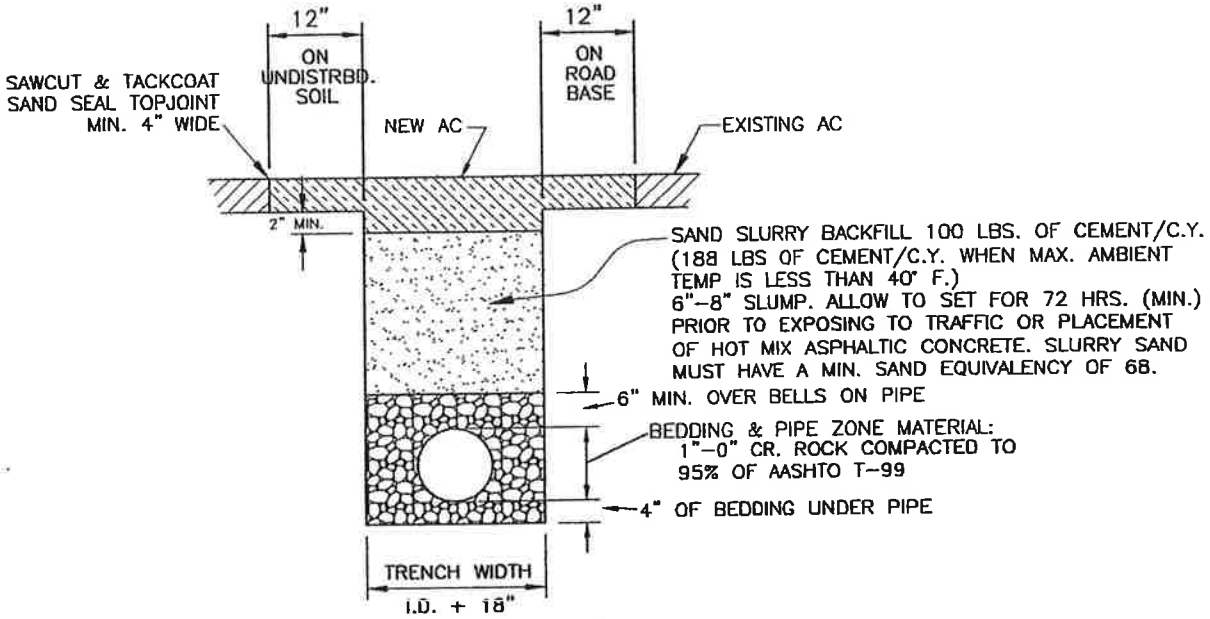

TRENCH DETAIL IN MORATORIUM AREAS

NOTES:

1) MORATORIUM STREETS SHALL NOT BE CUT EXCEPT FOR EMERGENCY UTILITY REPAIR.

2) AFTER PATCHING, ENTIRE SURFACE SHALL BE INFRARED HEATED, BLENDED, AND COMPACTED.

3) INFRARED PATCHING WILL BE WARRANTED FOR 18 MONTHS FROM DATE OF COMPLETION.

4) INFRARED PATCHING SHALL BE PERFORMED WITHIN 14 CALENDAR DAYS OF TRENCH PATCH WORK (WEATHER PERMITTING).

5) DEPENDING ON SEVERITY OF TRENCHING, EXTENSIVE PAVEMENT REPLACEMENT MAY BE REQUIRED AT THE DISCRETION OF THE CITY.

NO.	DATE	INITIAL	REVISIONS
1	07/05	BWD	COMPACTION REQ.

DESIGN:	DRAWN:	APPROVED: 2001

CITY OF EAGLE POINT ENGINEERING DEPT.

TRENCH IN MORATORIUM STREET

SCALE: NONE | DWG. NO. EP-301

EP-301.DWG

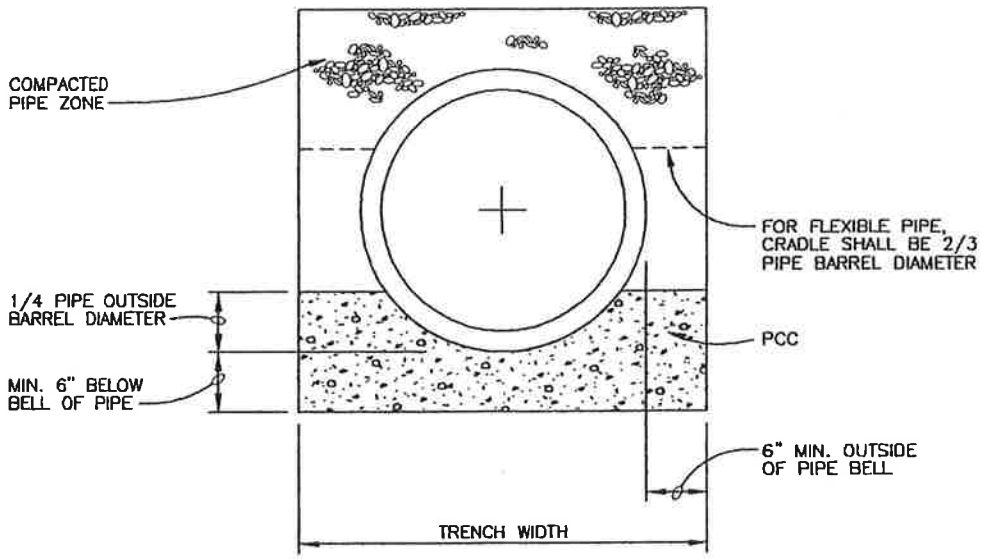

ENCASEMENT DETAIL

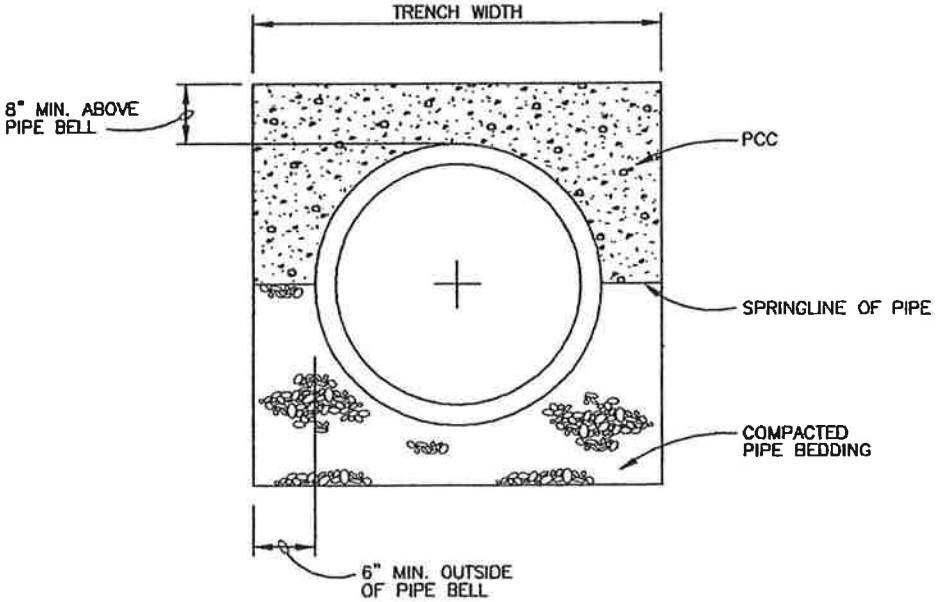

CAP DETAIL

NOTES:
THE CONCRETE SHALL BE CLASS 3300 MINIMUM.

NO.	DATE	INITIAL	REVISIONS
DESIGN:		DRAWN:	APPROVED: 2001

CITY OF EAGLE POINT
ENGINEERING DEPT.

CONCRETE CRADLE
AND CAP DETAILS

SCALE: NONE | DWG. NO. EP-302

EP-302.DWG

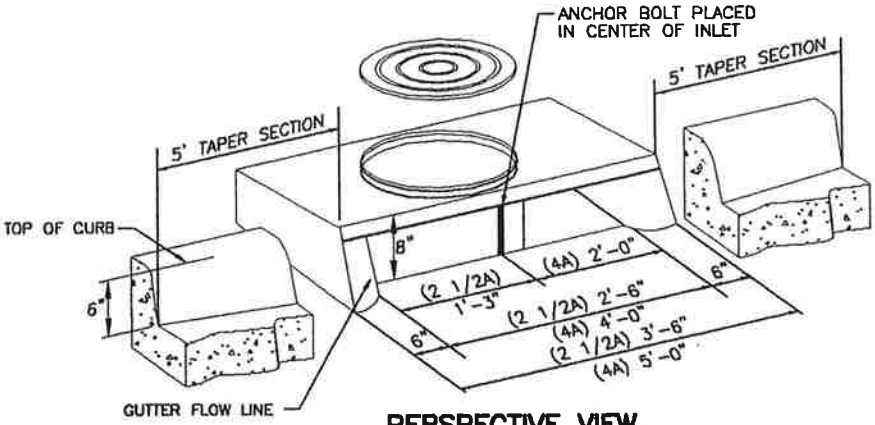

PERSPECTIVE VIEW

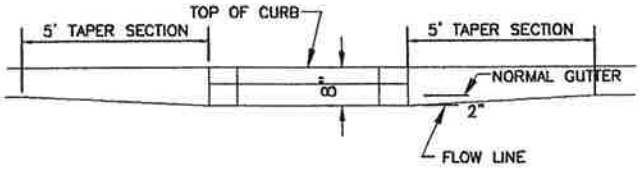

ELEVATION

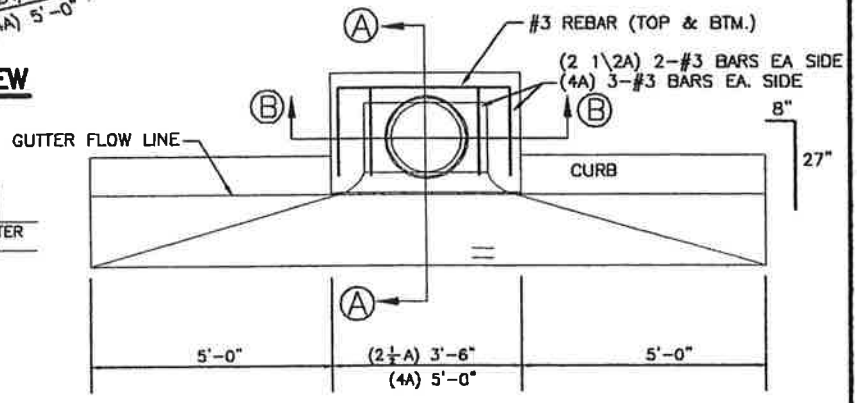

PLAN VIEW

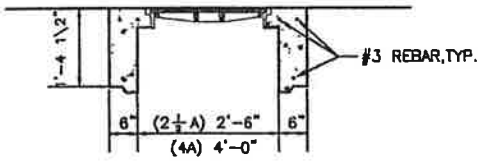

SECTION B-B

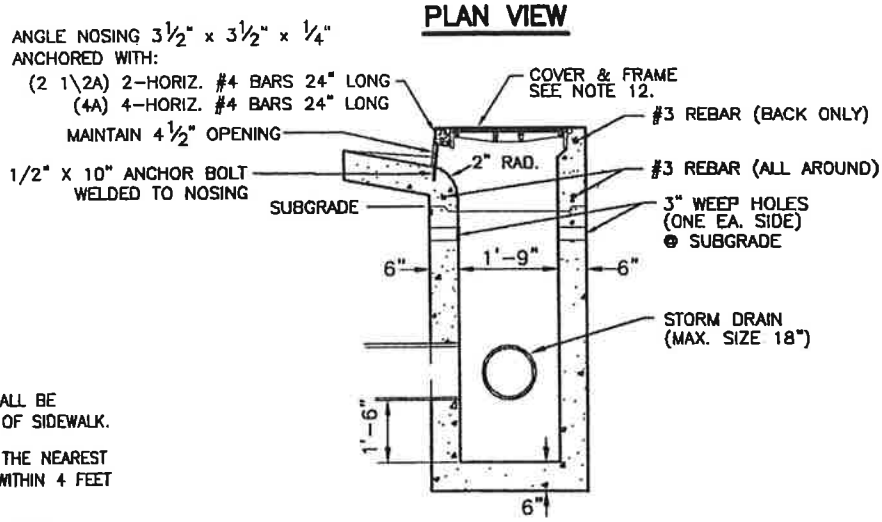

SECTION A-A

MAXIMUM DEPTH = 4' FOR 2A
MAXIMUM DEPTH = 6' FOR 4A

NOTES:

1) SURFACE CROSS-SLOPE FOR NEW CONSTRUCTION SHALL BE 1/4" RISE PER FOOT FROM TOP OF CURB TO BACK OF SIDEWALK.
2) EXISTING CURB AND GUTTER SHALL BE REMOVED TO THE NEAREST CONTRACTION JOINT OR COLD JOINT WHEN JOINT IS WITHIN 4 FEET OF THE TRANSITION POINT.
3) ALL CONCRETE SHALL BE SAWCUT AND A SMOOTH, UNIFORM JOINT PROVIDED.
4) CURING COMPOUND SHALL BE APPLIED IMMEDIATELY AFTER SURFACE IS FINISHED: WHITE PIGMENT RECOMMENDED, CLEAR PIGMENT ACCEPTABLE.
5) FLOOR SHALL BE POURED ON: UNDISTURBED, STABLE SOIL; COMPACTED BASE COMPACTED BASE (95% R.D. 3/4"-0 CRUSHED ROCK, 6" MIN. THICK); OR OTHER APPROVED BASE.
6) SET SECTION JOINTS IN 1:2 MORTAR AND MORTAR JOINT SEALANT ST-B, 1" WIDE. SEALANT SHALL MEET FED. SPECS. SS-5-00201 (CSA-FSS).
7) ALL CONCRETE SHALL BE FORMED AND VIBRATED TO REMOVE VOIDS.
8) PIPE(S) SHALL BE FLUSH WITH INSIDE WALL.
9) ALL CONCRETE SHALL BE CLASS 3300 - 3/4" 0.54 W/C RATIO.
10) SURFACE HAVE A FINISHED TEXTURE THAT WILL NOT BE SLICK WHEN WET (MEDIUM BROOM FINISH), OR MATCH ADJACENT SIDEWALK.
11) ALL METAL PARTS SHALL BE HOT DIPPED GALVANIZED AFTER FABRICATION.
12) COVER SHALL BE INLAND FOUNDRY CO. INC. 706 MANHOLE RING AND COVER (OR EQUAL), SUITABLE FOR HEAVY TRAFFIC LOADING.

NO.	DATE	INITIAL	REVISIONS
1	07/05	BWD	ADDED 18" SUMP
2	09/05	BWD	ADDED ANCHOR BOLT

DESIGN: | DRAWN: | APPROVED: 2001

CITY OF EAGLE POINT ENGINEERING DEPT.

CONCRETE CURB INLET

SCALE: NONE | DWG. NO. EP-303

EP-303.DWG

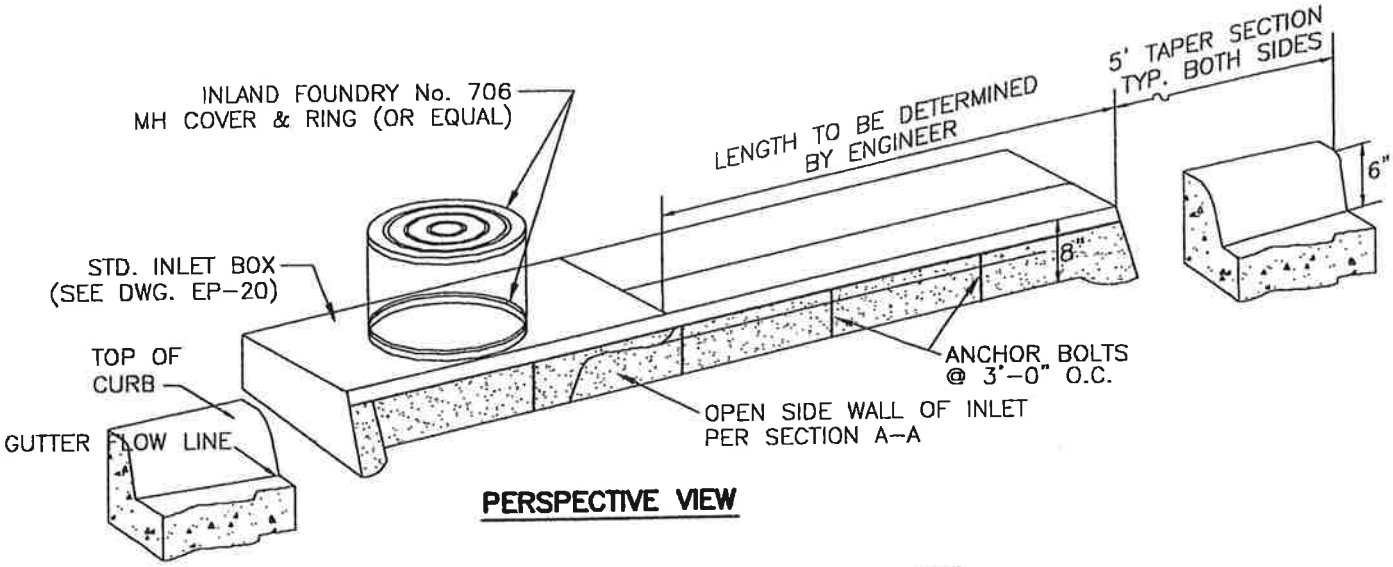

PERSPECTIVE VIEW

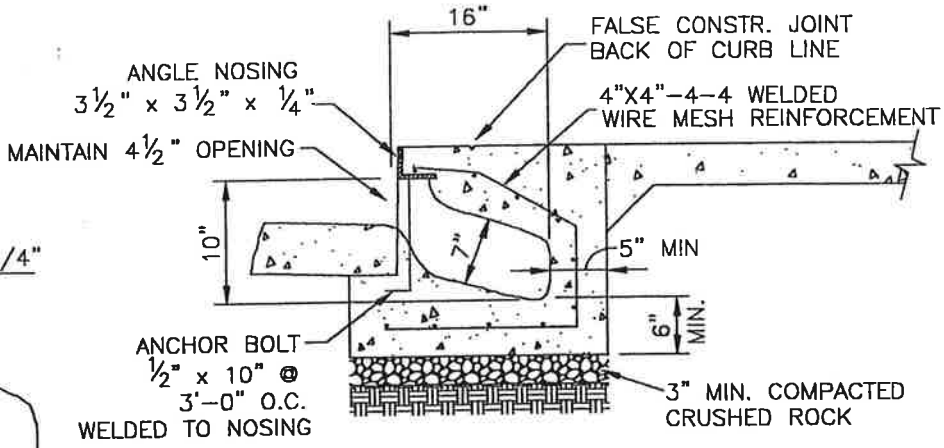

SECTION A-A

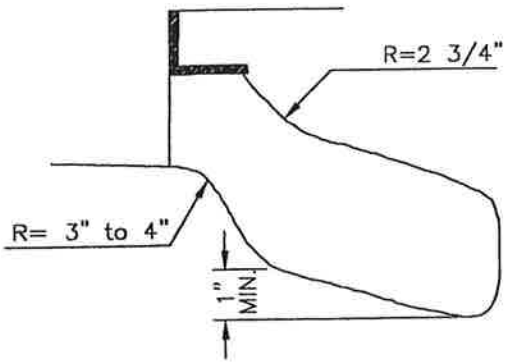

GALLERY DETAIL

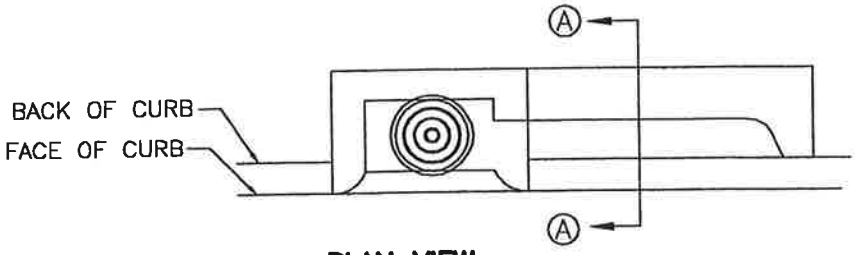

PLAN VIEW

NOTES:

1. SURFACE CROSS-SLOPE FOR NEW CONSTRUCTION SHALL BE ¼" RISE PER FOOT FROM TOP OF CURB TO BACK OF SIDEWALK.
2. ALL CONCRETE SHALL BE FORMED AND VIBRATED TO REMOVE VOIDS.
3. CONCRETE SHALL BE CLASS 3300 – 3/4" 0.54 W/C RATIO
4. SURFACE HAVE A FINISHED TEXTURE THAT WILL NOT BE SLICK WHEN WET (MEDIUM BROOM FINISH), OR MATCH EXISTING ADJACENT SIDEWALK.
5. ALL METAL PARTS (EXCEPT REBAR) SHALL BE HOT DIPPED GALVANIZED AFTER FABRICATION.

NO.	DATE	INITIAL	REVISIONS
DESIGN:		DRAWN:	APPROVED: 2001

CITY OF EAGLE POINT ENGINEERING DEPT.

INLET GALLERY

SCALE: **NONE** DWG. NO. **EP-304**

EP-304.DWG

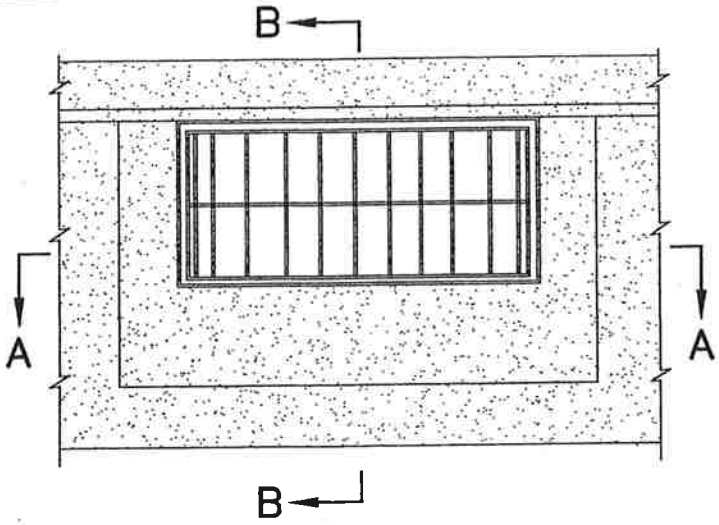

PLAN

NOTES:

1. PRECAST BASE WALLS MAY BE A MINIMUM OF 4" THICK.
2. CONCRETE SHALL BE CLASS 3300 – 3/4" 0.54 W/C RATIO
3. APPROVED CAST IRON FRAMES AND GRATES MAY BE ACCEPTED.

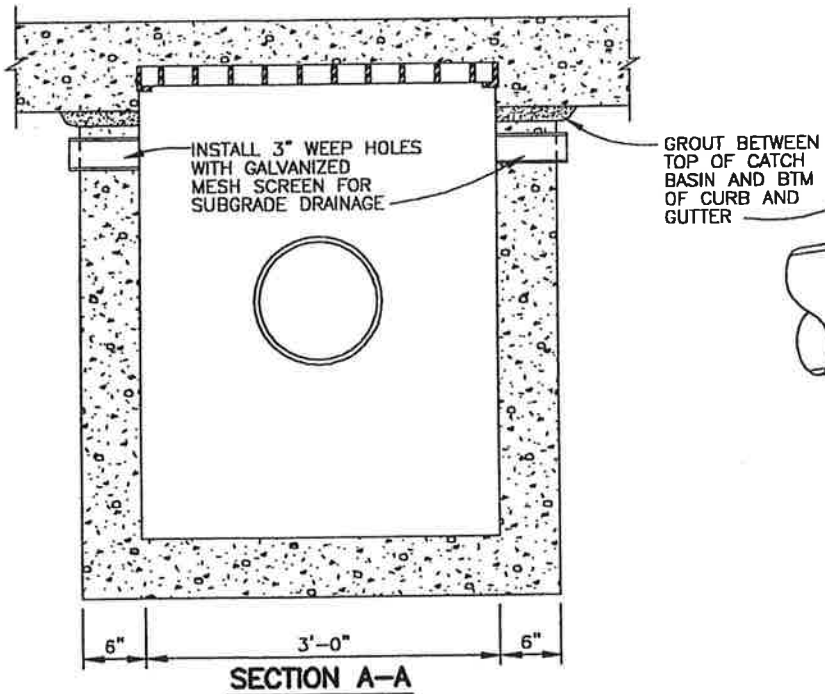

SECTION A–A

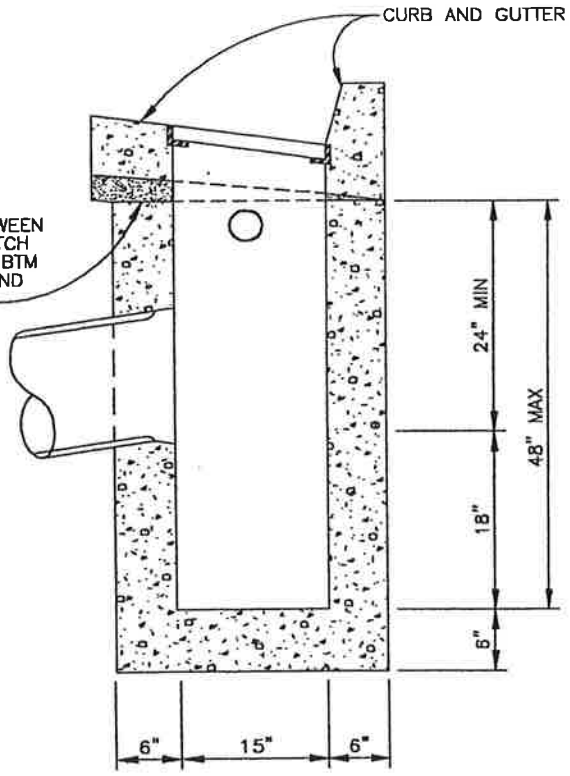

SECTION B–B

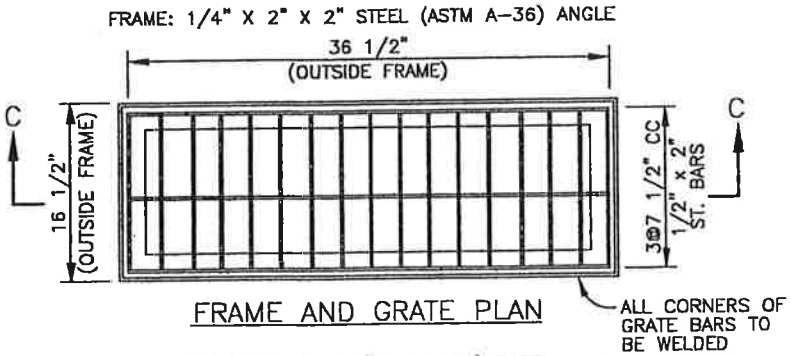

FRAME AND GRATE PLAN

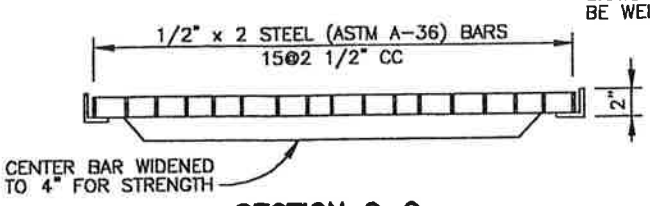

SECTION C–C

NO.	DATE	INITIAL	REVISIONS
DESIGN:		DRAWN:	APPROVED: 2001

CITY OF EAGLE POINT
ENGINEERING DEPT.

CATCH BASIN

SCALE: NONE | DWG. NO. EP–305

EP–305.DWG

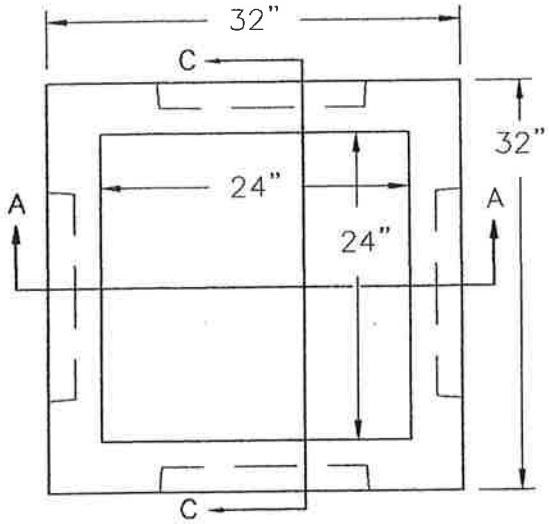

SECTION B–B

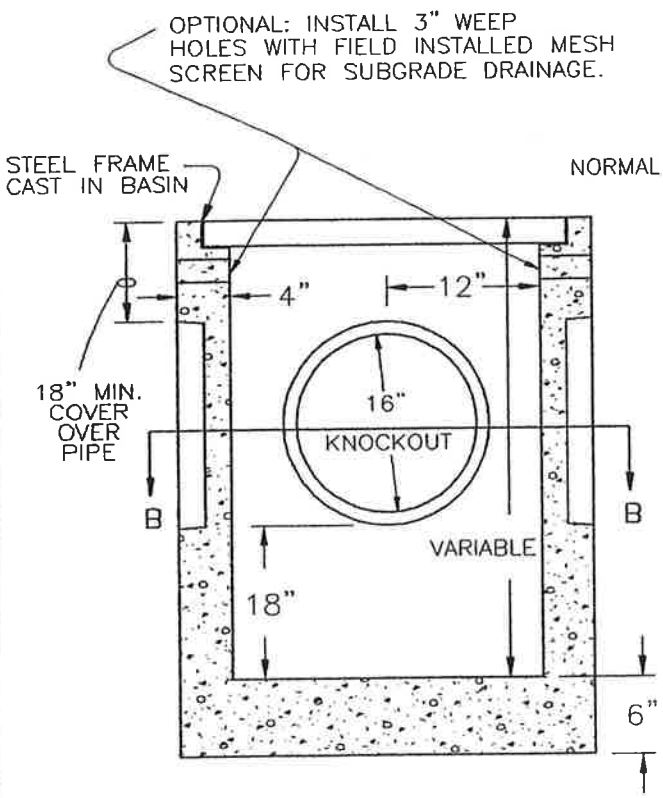

SECTION A–A

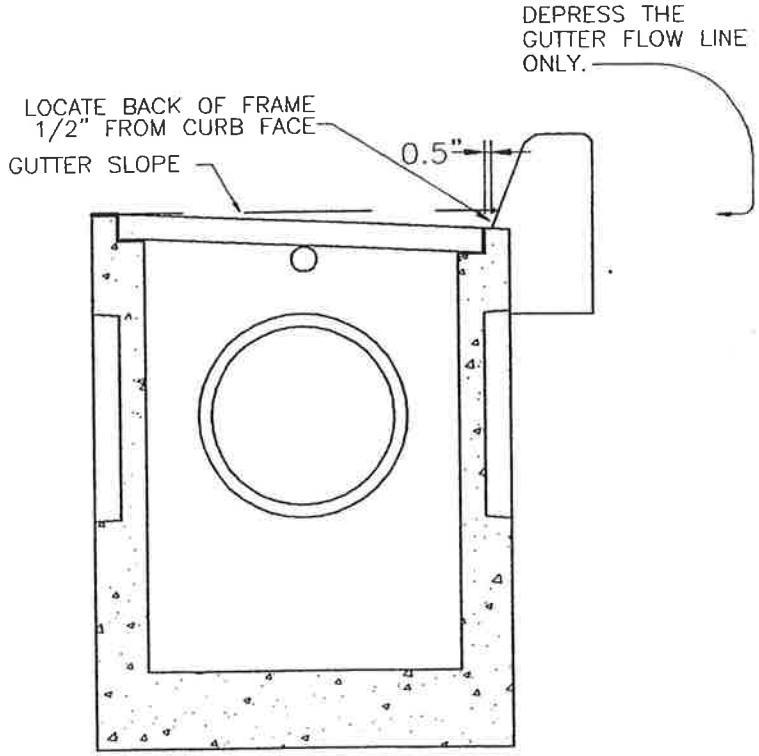

SECTION C–C

NOTES:

1. CATCH BASIN & GRATE SHALL MEET H20 LOADING
2. CONCRETE STRENGTH SHALL BE 3300 PSI – 3/4" 0.54 W/C RATIO.
3. PRECAST WALLS SHALL BE A MINIMUM OF 4" THICK.
4. SEE DRW 305B FOR FRAME AND GRATE
5. DEPRESS GUTTER FLOWLINE AND TRANSITION GUTTER AS SHOWN IN DRW. 305C PERSPECTIVE VIEW.
6. MAXIMUM DEPTH SHALL NOT EXCEED 4 FEET

NO.	DATE	INITIAL	REVISIONS
1	07/05	BWD	ADDED 18" SUMP

DESIGN:	DRAWN:	APPROVED: 2001

CITY OF EAGLE POINT ENGINEERING DEPT.

TYPE–3 CATCH BASIN

SCALE: **NONE** DWG. NO. **EP–305A**

EP–305A.DWG

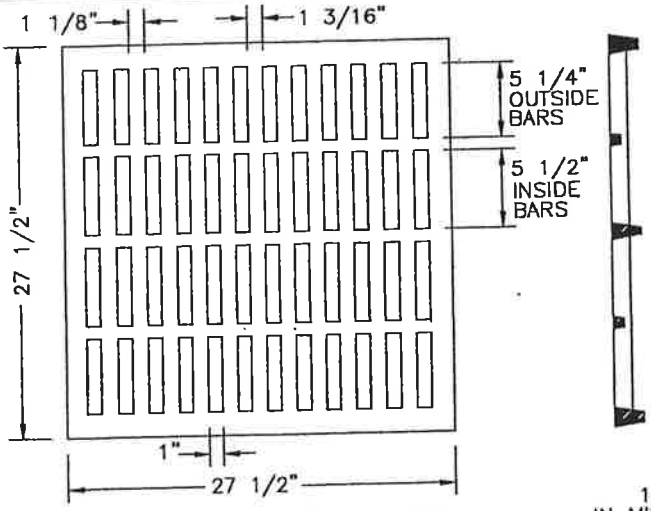

TYPE 3 CATCH BASIN GRATE

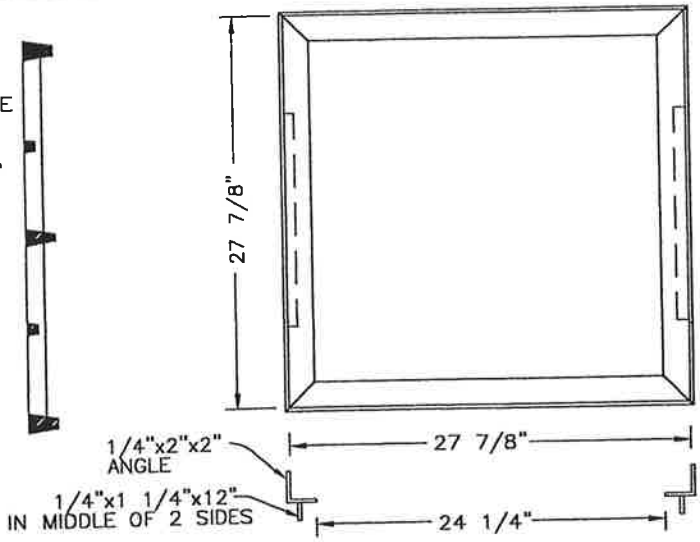

TYPE 3 FRAME – STEEL

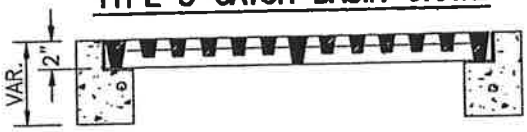

PRECAST RISER

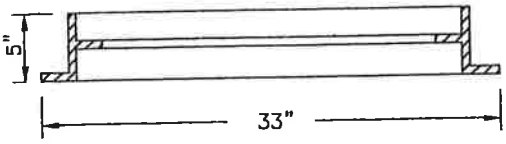

OPTIONAL CAST IRON FRAME
FOR A MORTAR–ON TYPE 3 CATCH BASIN

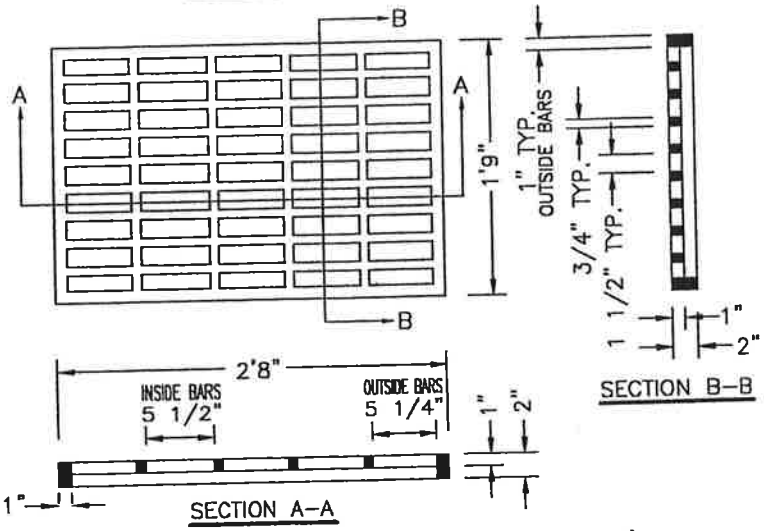

G–1 CATCH BASIN – 1 EACH/UNIT

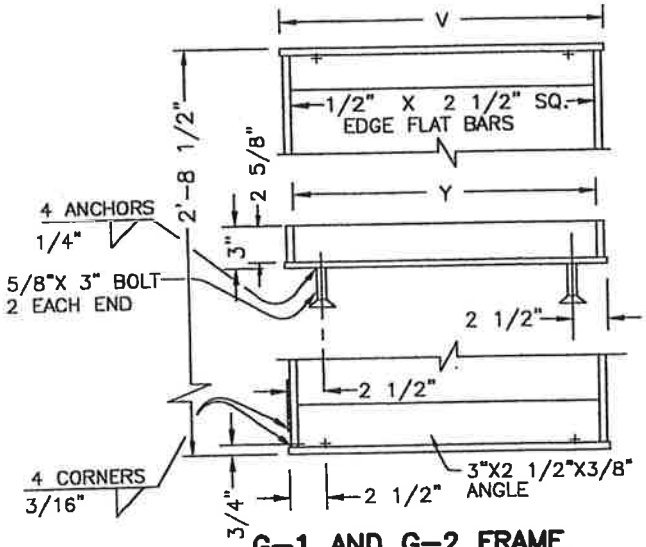

G–1 AND G–2 FRAME

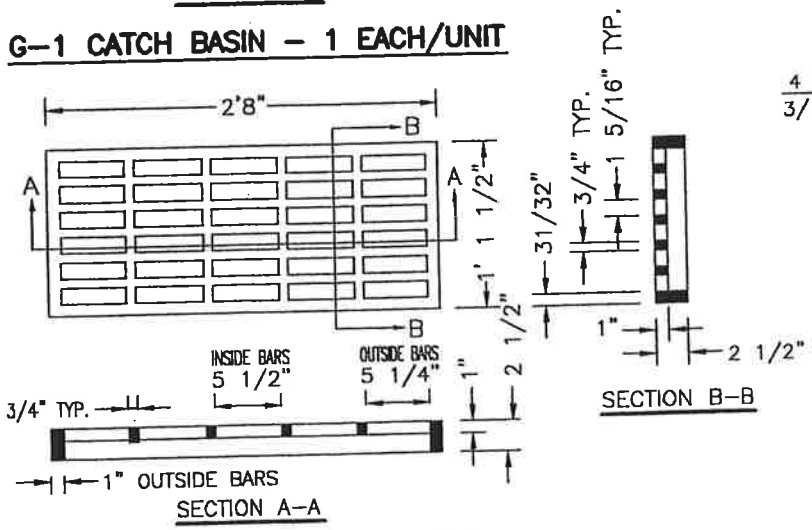

G–2 CATCH BASIN 2 EACH/UNIT
CAST IRON GRATES

INLET TYPE	V	Y
G–1, CG–1	1'–10 3/4"	1'–9 3/8"
G–2, CG–2	2'–4 3/4"	2'–3 3/8"

NOTES:
CATCH BASIN, FRAME AND GRATES SHALL MEET H20 LOADING

NO.	DATE	INITIAL	REVISIONS
DESIGN:		DRAWN:	APPROVED: 2001

CITY OF EAGLE POINT
ENGINEERING DEPT.

FRAMES AND GRATES
G–1, G–2, TYPE 3

SCALE: NONE | DWG. NO. EP–305B

EP–305B.DWG

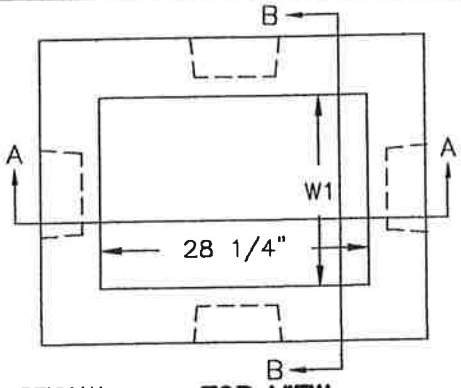

TOP VIEW

INLET TYPE	W	W_1	X	MAX DEPTH
G-1	2'-8 7/8"	1'-8 7/8"	1'-4 9/16"	4'
G-2	3'-3 3/8"	2' 3 3/8"	1'-10 9/16"	6'

NOTES:

1. CONCRETE STRENGTH SHALL BE 3000 PSI.
2. PRECAST BASE WALLS SHALL BE A MINIMUM 4" THICK. CAST-IN-PLACE BASE WALLS SHALL BE 6" THICK.

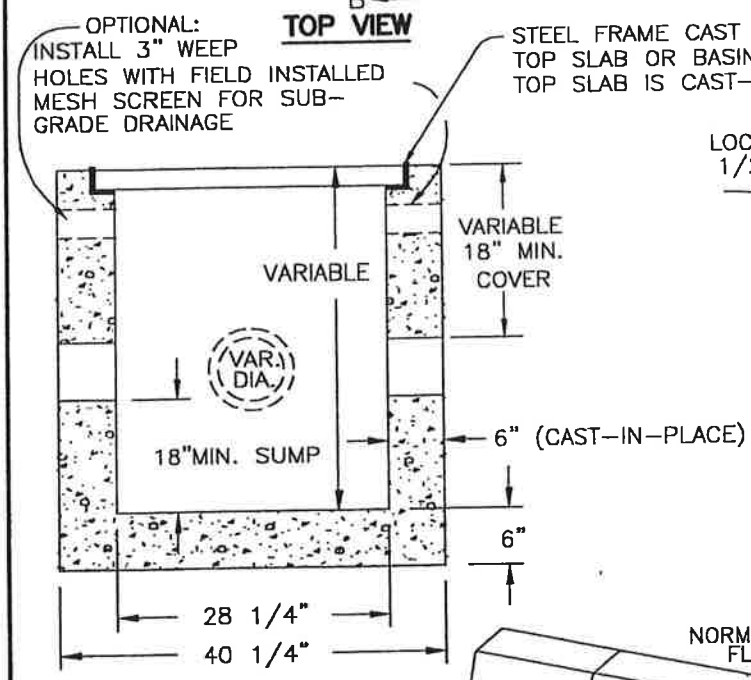

SECTION A-A

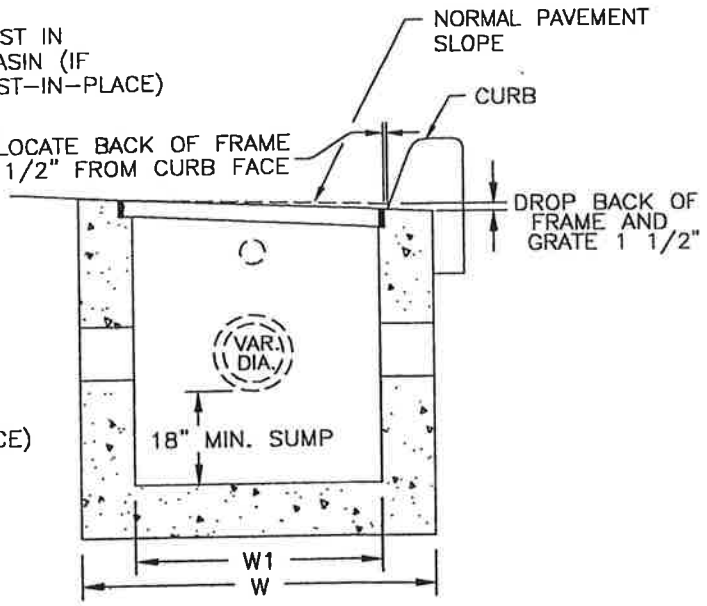

SECTION B-B

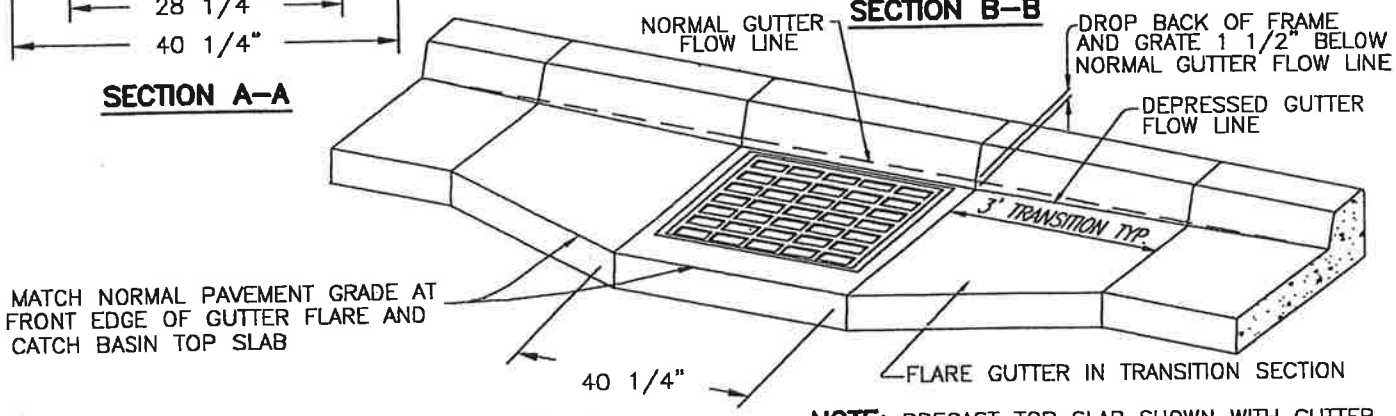

NOTE: PRECAST TOP SLAB SHOWN WITH GUTTER TRANSITION FLARE IF THE TOP SLAB IS CAST-IN-PLACE, NO FLARE IS REQUIRED IN THE TRANSITION SECTION: MATCH THE TOP FRONT EDGE OF THE FRAME AND THE TOP FRONT EDGE OF THE CAST-IN-PLACE TOP SLAB TO THE NORMAL PAVEMENT GRADE.

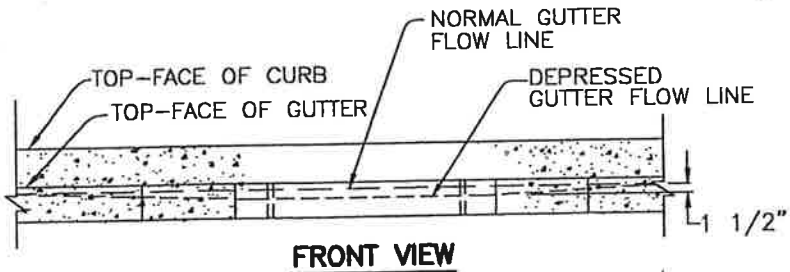

FRONT VIEW

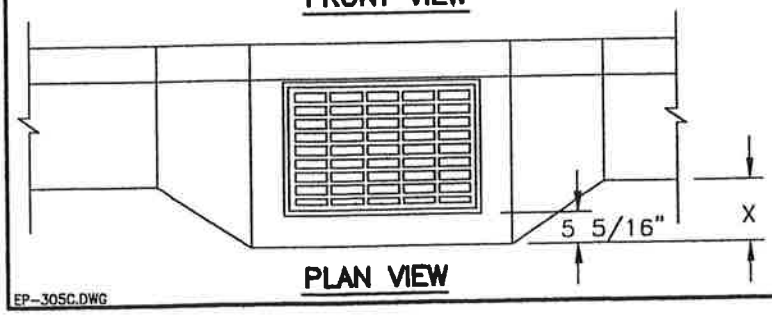

PLAN VIEW

NO.	DATE	INITIAL	REVISIONS
DESIGN:		DRAWN:	APPROVED: 2001

CITY OF EAGLE POINT
ENGINEERING DEPT.

TYPE G-1, G-2 CATCH BASIN WITH SUMP

SCALE: NONE | DWG. NO. EP-305C

EP-305C.DWG

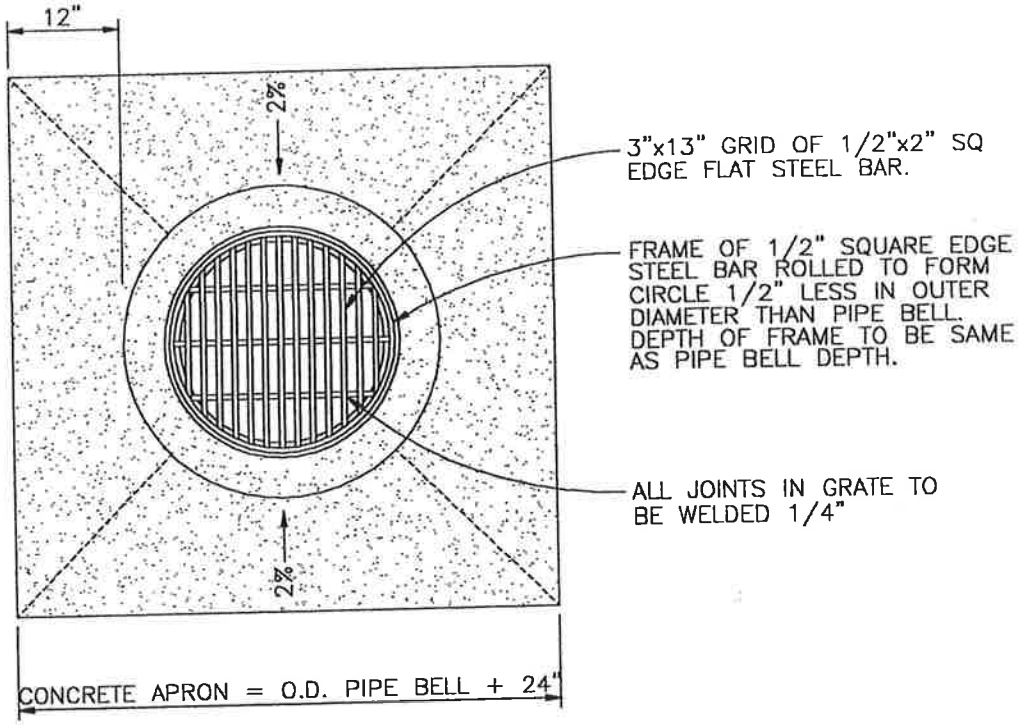

PLAN

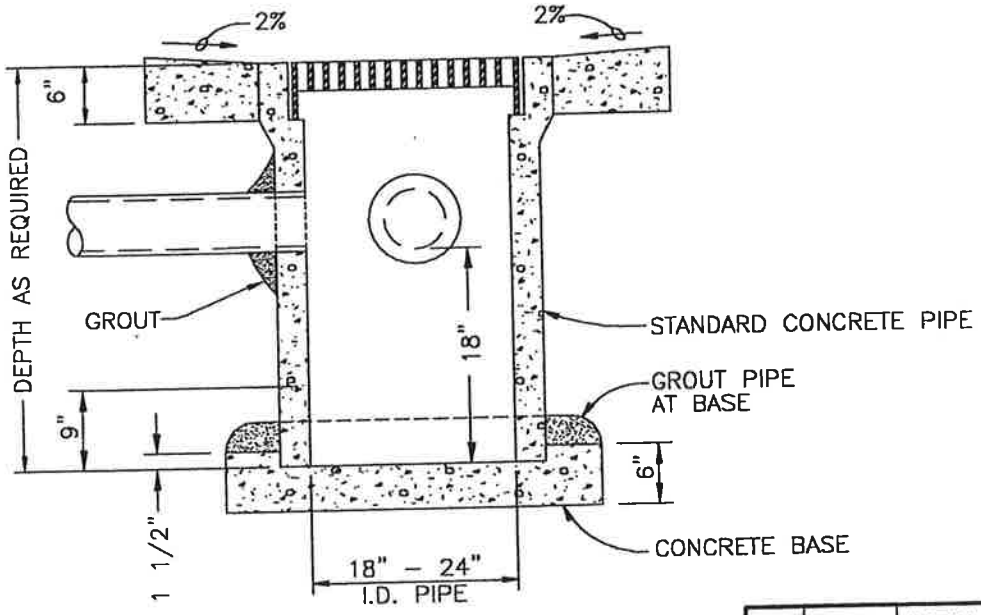

SECTION A–A

NOTES:

1. GRATES SHALL BE CONSTRUCTED FOR BICYCLE SAFETY.
2. PRECAST CONCRETE CATCH BASINS MAY BE USED WHEN SPECIFIED OR APPROVED.
3. NOT FOR USE IN VEHICULAR TRAFFIC AREAS.

NO.	DATE	INITIAL	REVISIONS
DESIGN:		DRAWN:	APPROVED: 2001

CITY OF EAGLE POINT ENGINEERING DEPT.

AREA DRAINAGE BASIN OR FIELD INLET

SCALE: **NONE** DWG. NO. **EP–306**

EP–306.DWG

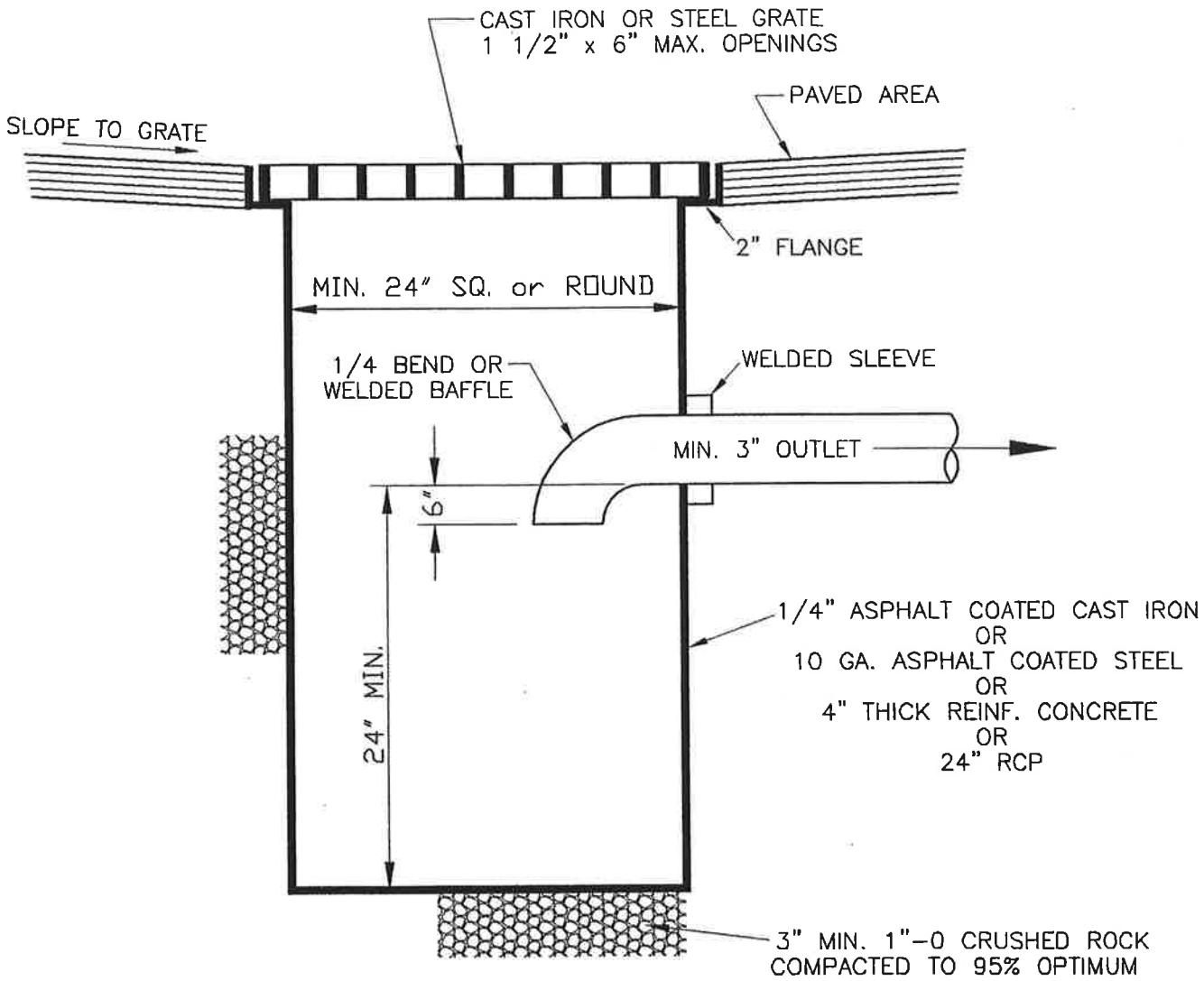

AREA CATCH BASIN DETAIL

NO.	DATE	INITIAL	REVISIONS
DESIGN:		DRAWN:	APPROVED: 2001

CITY OF EAGLE POINT
ENGINEERING DEPT.

AREA CATCH BASIN

SCALE: NONE | DWG. NO. EP-306A

EP-306A.DWG

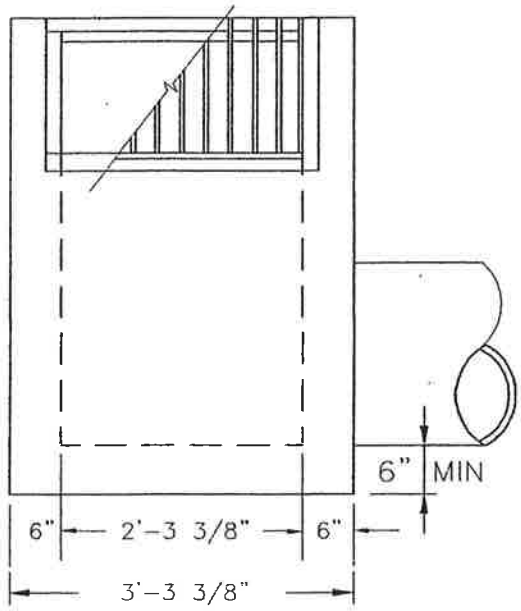

SECTION B–B

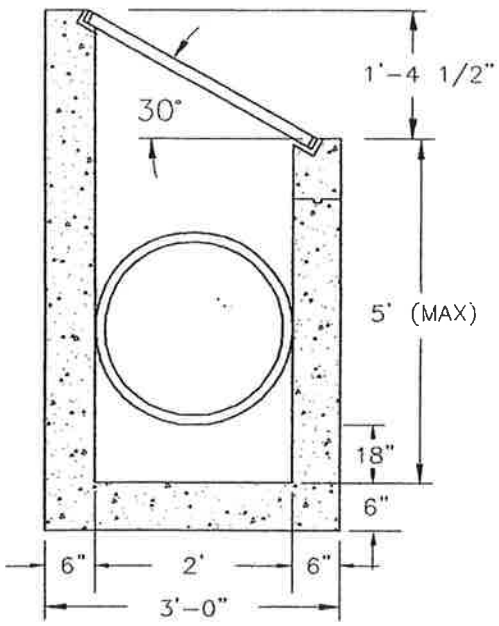

SECTION A–A

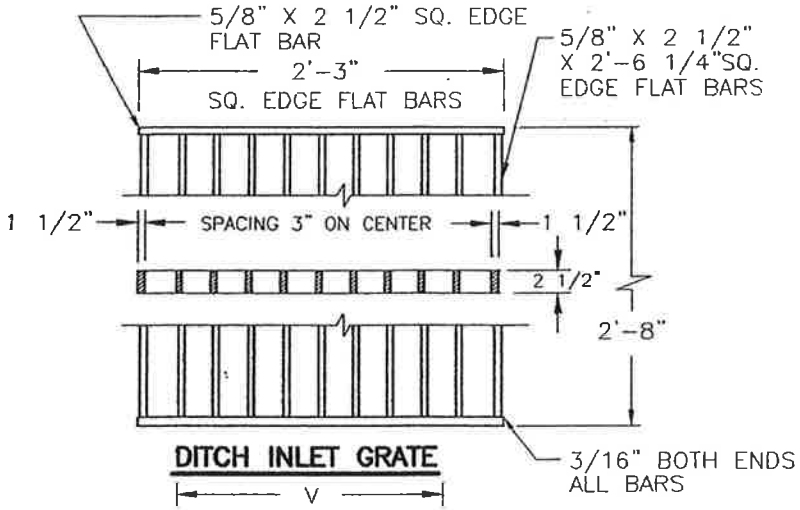

DITCH INLET GRATE

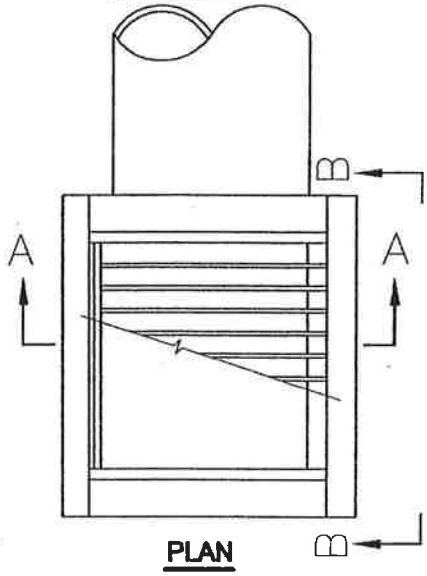

PLAN

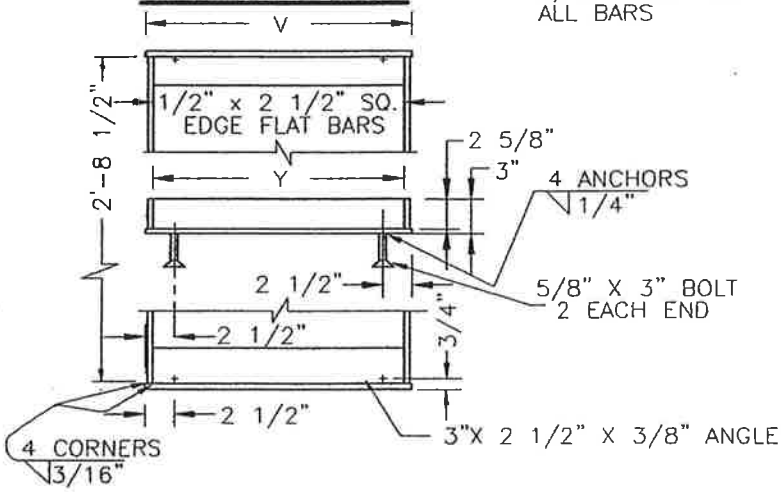

NOTES:

1. CONCRETE STRENGTH SHALL BE 3300 PSI.
2. G–2 GRATES MAY BE USED IF APPROVED BY THE ENGINEER.
3. CATCH BASIN, FRAME, AND GRATES SHALL MEET H20 LOADING.
4. INSIDE FRAME DIMENSIONS: 2'-3 3/8", 2'-8 1/2."

NOTE:
3/8" CROSS BARS SHALL BE FLUSH WITH THE GRATE SURFACE AND MAY BE FILLET WELDED, RESISTANCE WELDED OR ELECTROFORGED TO BEARING BARS.

DITCH INLET FRAME

INLET TYPE	V	Y	Y_1	NO. OF BARS	TYPE
D	2'-4 3/4"	2'-3 3/8"	2'-3"	9	1

NO.	DATE	INITIAL	REVISIONS
1	07/05	BWD	ADDED 18" SUMP

DESIGN:	DRAWN:	APPROVED: 2001

CITY OF EAGLE POINT ENGINEERING DEPT.

DITCH INLET

SCALE: NONE | DWG. NO. EP–306B

EP-306B.DWG

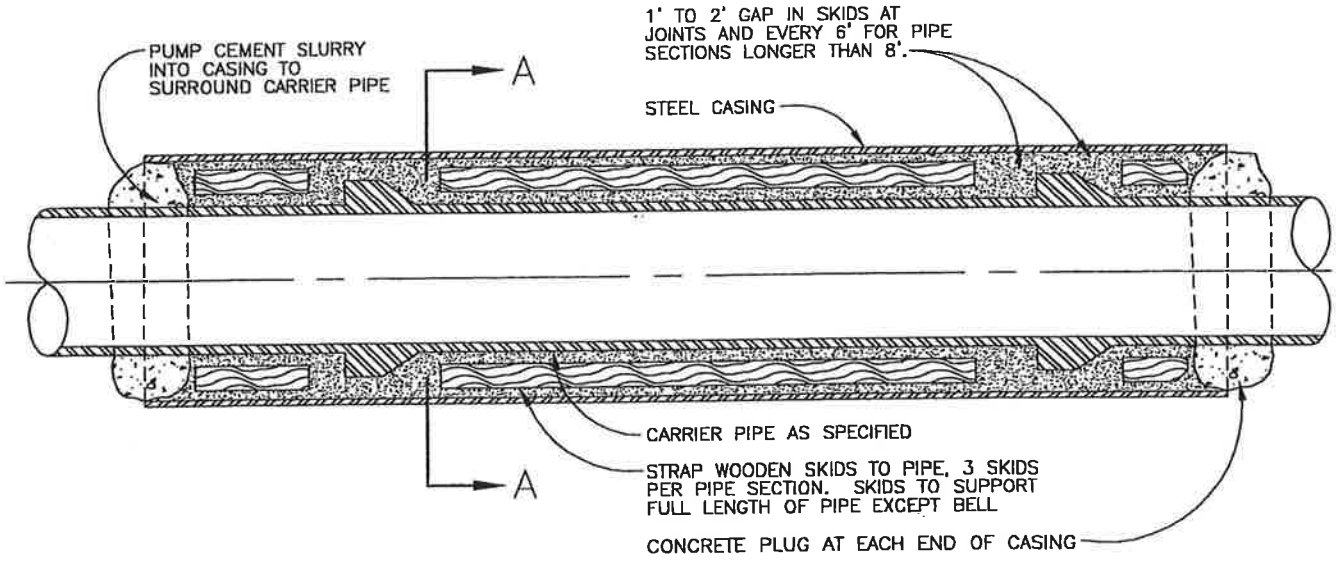

PLAN

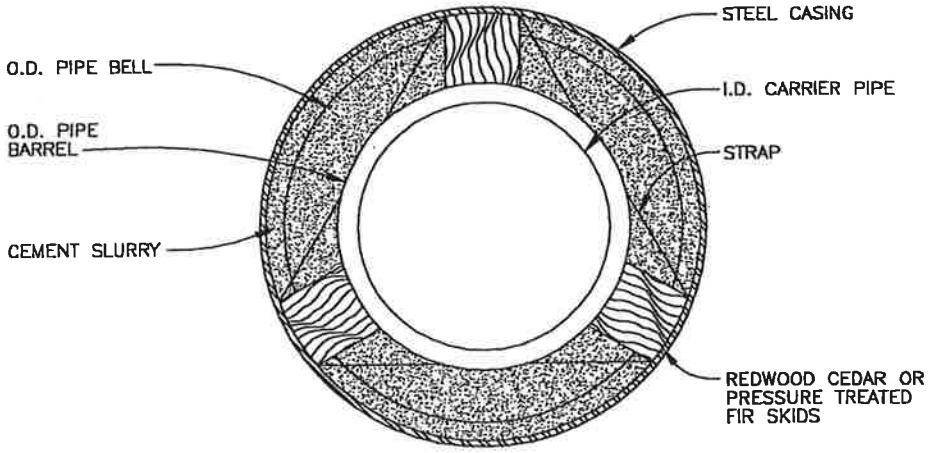

SECTION A–A

NOTES:

PLUG ENDS OF CASING WITH CONCRETE.

NO.	DATE	INITIAL	REVISIONS
DESIGN:		DRAWN:	APPROVED: 2001

CITY OF EAGLE POINT ENGINEERING DEPT.

BORE CASING DETAIL

SCALE: **NONE** DWG. NO. **EP–307**

EP-307.DWG

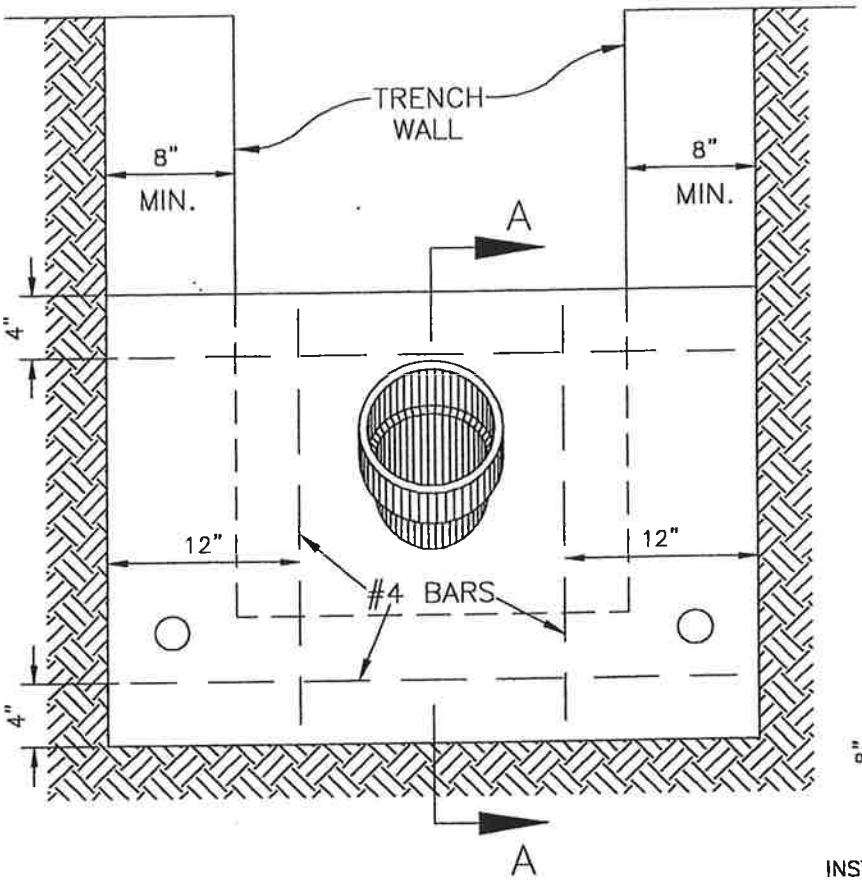

Elevation

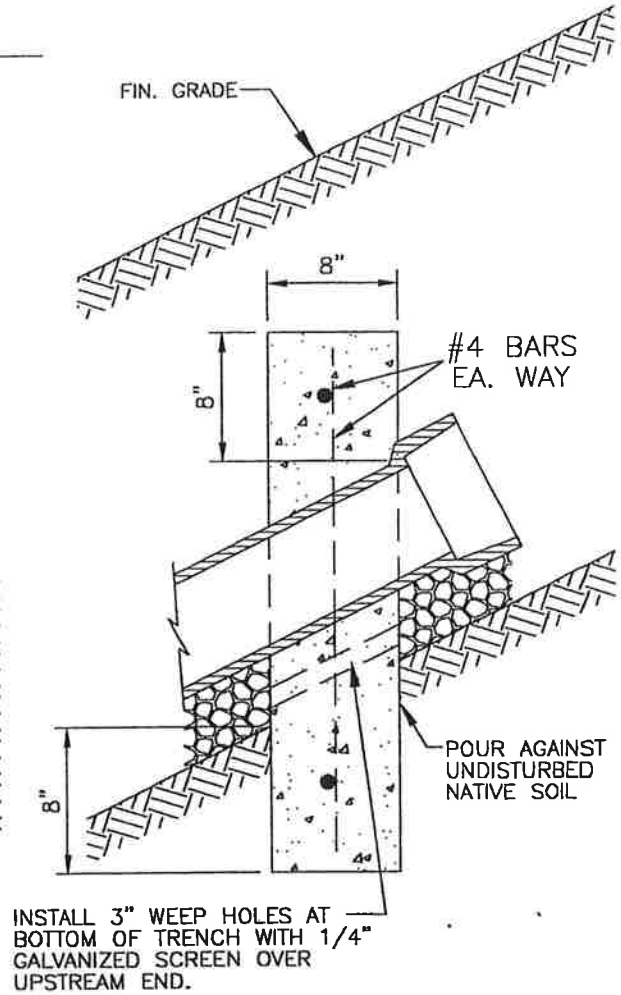

Section A–A

SPACING FOR ANCHOR BLOCKS

SLOPE %	APPROX. SPACING
0–19	NONE REQ'D
20–34	35 FT.
35–50	25 FT.
51 or MORE	15 FT. or SPECIAL DESIGN

NOTE:

1. ANCHOR BLOCK SHALL ALWAYS BE IN BARREL SECTION OF PIPE, AND SHALL INCORPORATE PART OF THE BELL.
2. "WINGS" OF ANCHOR TO BE POURED INTO EXISTING UNDISTURBED GROUND.
3. CONCRETE ANCHOR WALLS (CLASS 3300) SHALL BE CONSTRUCTED USING FORMS WHEN STORM DRAINS, AND OTHER PIPELINES ARE CONSTRUCTED WITH SLOPES 20 PERCENT OR GREATER. REMOVE FORMS PRIOR TO BACKFILLING TRENCH.

NO.	DATE	INITIAL	REVISIONS
DESIGN:		DRAWN:	APPROVED: 2001

CITY OF EAGLE POINT
ENGINEERING DEPT.

PIPE
ANCHOR BLOCK DETAIL

SCALE: **NONE** DWG. NO. **EP–308**

EP–308.DWG

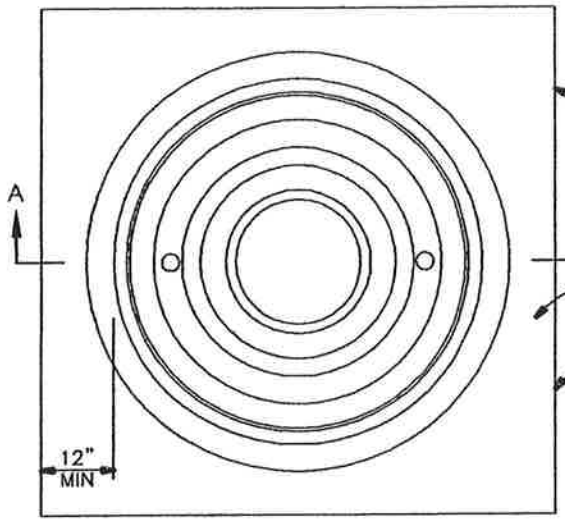

SAW CUT SQUARE OR CIRCULAR AND REMOVE PAVEMENT 2-FOOT MINIMUM LARGER THAN MANHOLE FRAME DIMENSION

REPLACE WITH 2-INCH THICK AC. PAVING OPTIONAL

APPLY TACK COAT TO EDGES OF EXISTING PAVEMENT BEFORE INSTALLING PATCH. FINISH JOINT WITH ASPHALTIC SEAL AND SAND.

PLAN

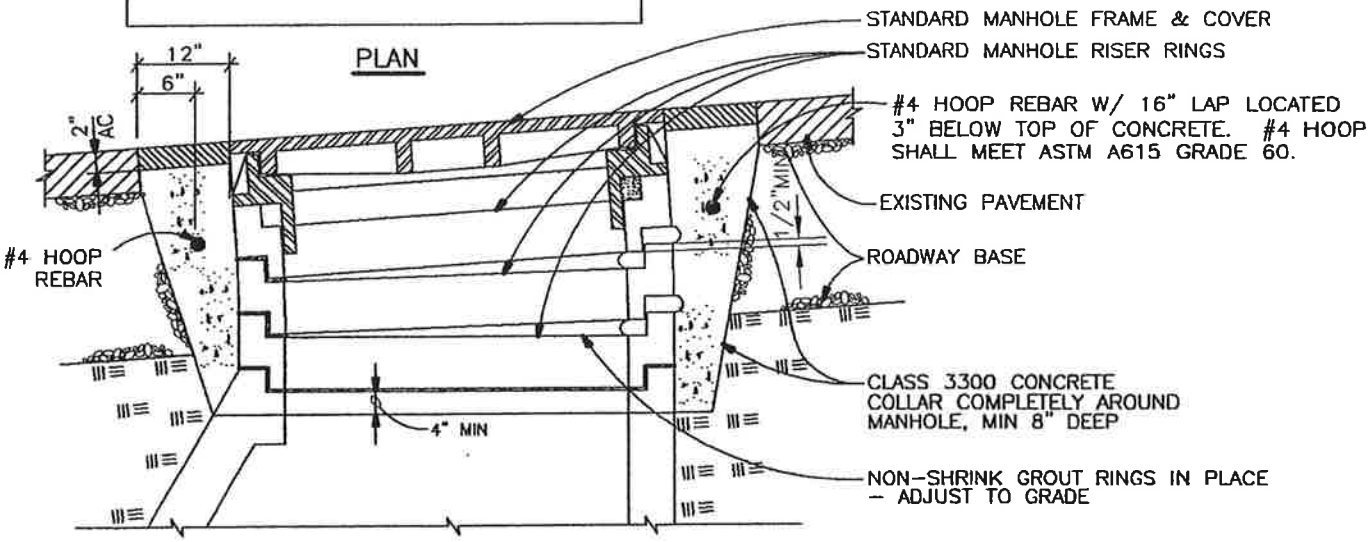

SECTION A-A

TYPICAL MANHOLE GRADE ADJUSTMENT IN STREET

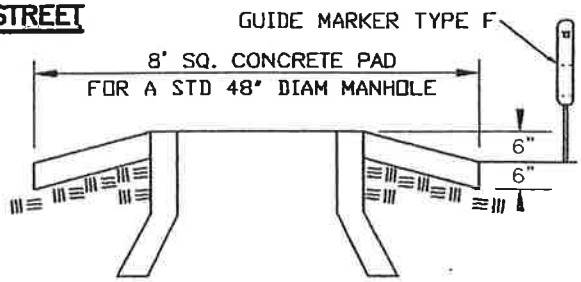

TOP OF MANHOLE IN UNIMPROVED AREA

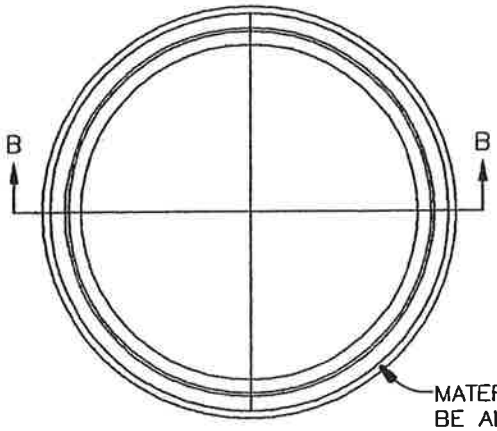

MATERIAL SHALL BE ALUMINUM ALLOY 319.2, 356.2 OR A-360

MANHOLE ADJUSTMENT RINGS FOR RESURFACING

NO.	DATE	INITIAL	REVISIONS
1	07/05	BWD	ADD REBAR
DESIGN:		DRAWN:	APPROVED: 2001

CITY OF EAGLE POINT ENGINEERING DEPT.

MANHOLE ADJUSTMENT DETAILS

SCALE: NONE | DWG. NO. EP-309

EP-309.DWG

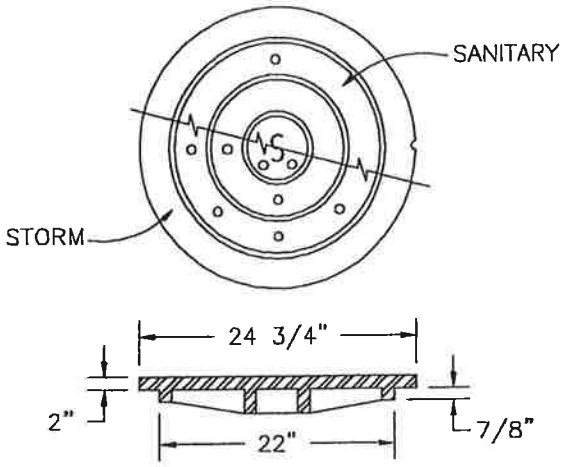

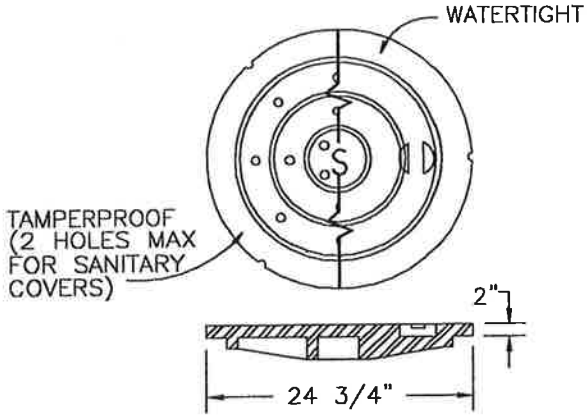

CAST IRON TAMPERRPROOF & WATERTIGHT

(FRAMES AVAILABLE IN STANDARD OR SUBURBAN PATTERN)

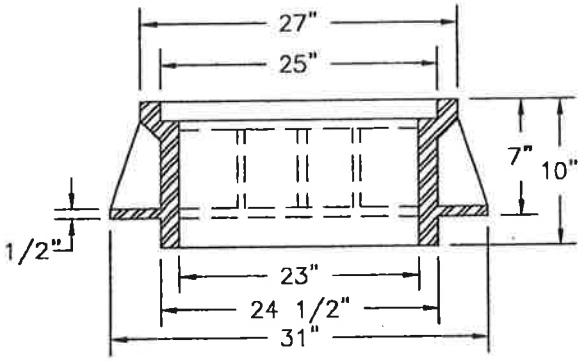

CAST IRON STANDARD

(APPROX. WT. – 387 LBS.)

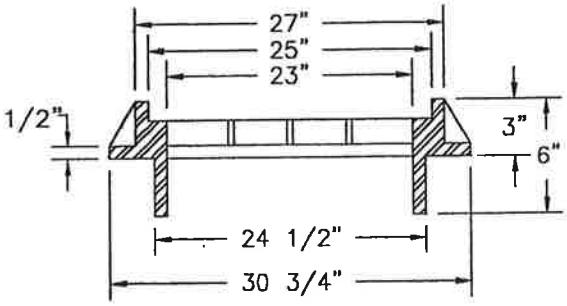

CAST IRON SUBURBAN

(APPROX. WT. – 305 LBS.)

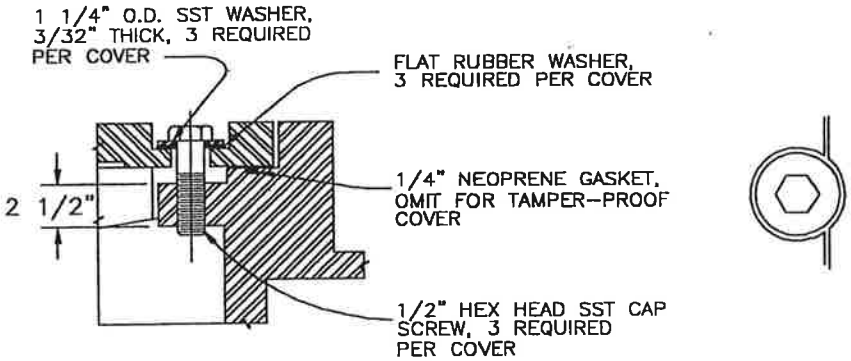

NOTES:

3 REQUIRED, 1/2" x 1 1/4" PENTAGONAL OR HEXAGONAL HEAD, BRONZE OR CAD. PLATED. INSTALL FRAME SO THAT ONE BOLT BOSS IS LOCATED OVER THE MANHOLE LADDER.

BOLT–DOWN DETAIL

(FOR TAMPERPROOF AND WATERTIGHT)

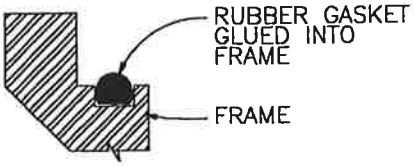

WATERTIGHT GASKET DETAIL

NOTES:

1. TAMPERPROOF COVERS REQ'D ON SANITARY OR STORM DRAIN MANHOLE WHERE LOCATED IN PEDESTRIAN WAYS OR EASMENT AREAS. TAMPERPROOF COVERS FOR SANITARY MANHOLES SHALL HAVE 2 HOLES MAXIMUM.
2. WATERTIGHT COVERS REQUIRED IF LOCATED WHERE COVER MAY BE SUBMERGED.
3. FRAMES AND COVERS SHALL BE STAMPED WITH MANUFACTURER'S INITIALS, HEAT NUMBER AND POINT OF ORIGIN.

NO.	DATE	INITIAL	REVISIONS
DESIGN:		DRAWN:	APPROVED: 2001

CITY OF EAGLE POINT ENGINEERING DEPT.

MANHOLE COVER AND FRAME DETAILS

SCALE: **NONE** DWG. NO. **EP–310**

EP–310.DWG

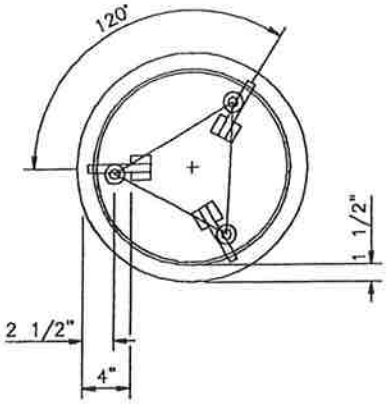

NOTES:
BOLTS TO BE FURNISHED WITH STANDARD HEX-HEAD NUTS & COTTER KEYS. COVER AND RING TO BE MACHINED TO A TRUE BEARING AT CONTACT POINTS.

PLAN

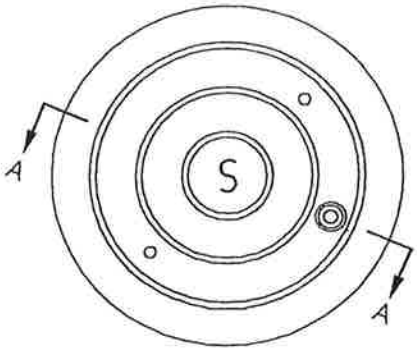

PLAN

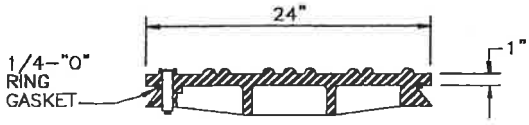

COVER SECTION

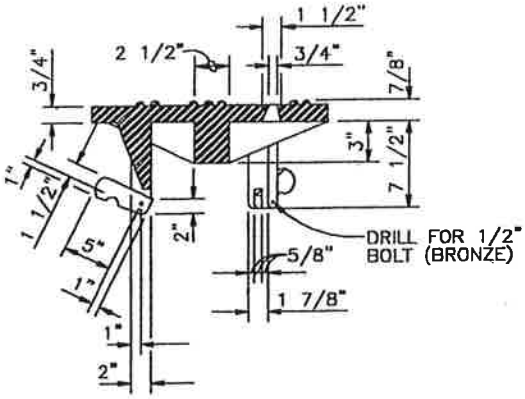

COVER SECTION

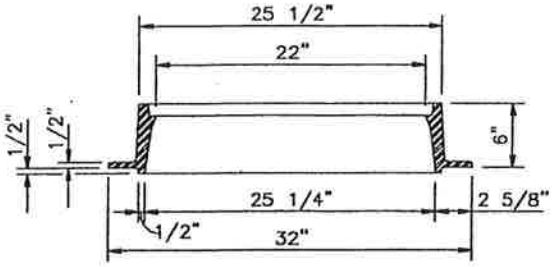

SECTION A-A

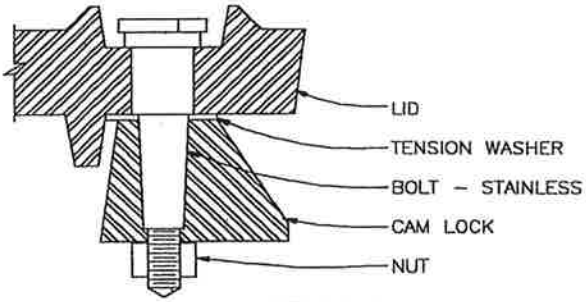

CAM-LOCK ASSEMBLY

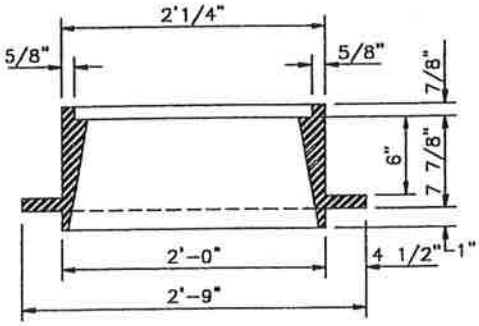

FRAME SECTION

STANDARD CAM-LOCK ALUMINUM FRAME AND COVER
(SANITARY AND STORM)

STANDARD CAM-LOCK ALUMINUM IRON FRAME AND COVER

NO.	DATE	INITIAL	REVISIONS
DESIGN:		DRAWN:	APPROVED: 2001

CITY OF EAGLE POINT
ENGINEERING DEPT.

CAM-LOCK MANHOLE COVER AND FRAME DETAILS (CAST IRON AND ALUMINUM)

SCALE: NONE | DWG. NO. EP-311

EP-311.DWG

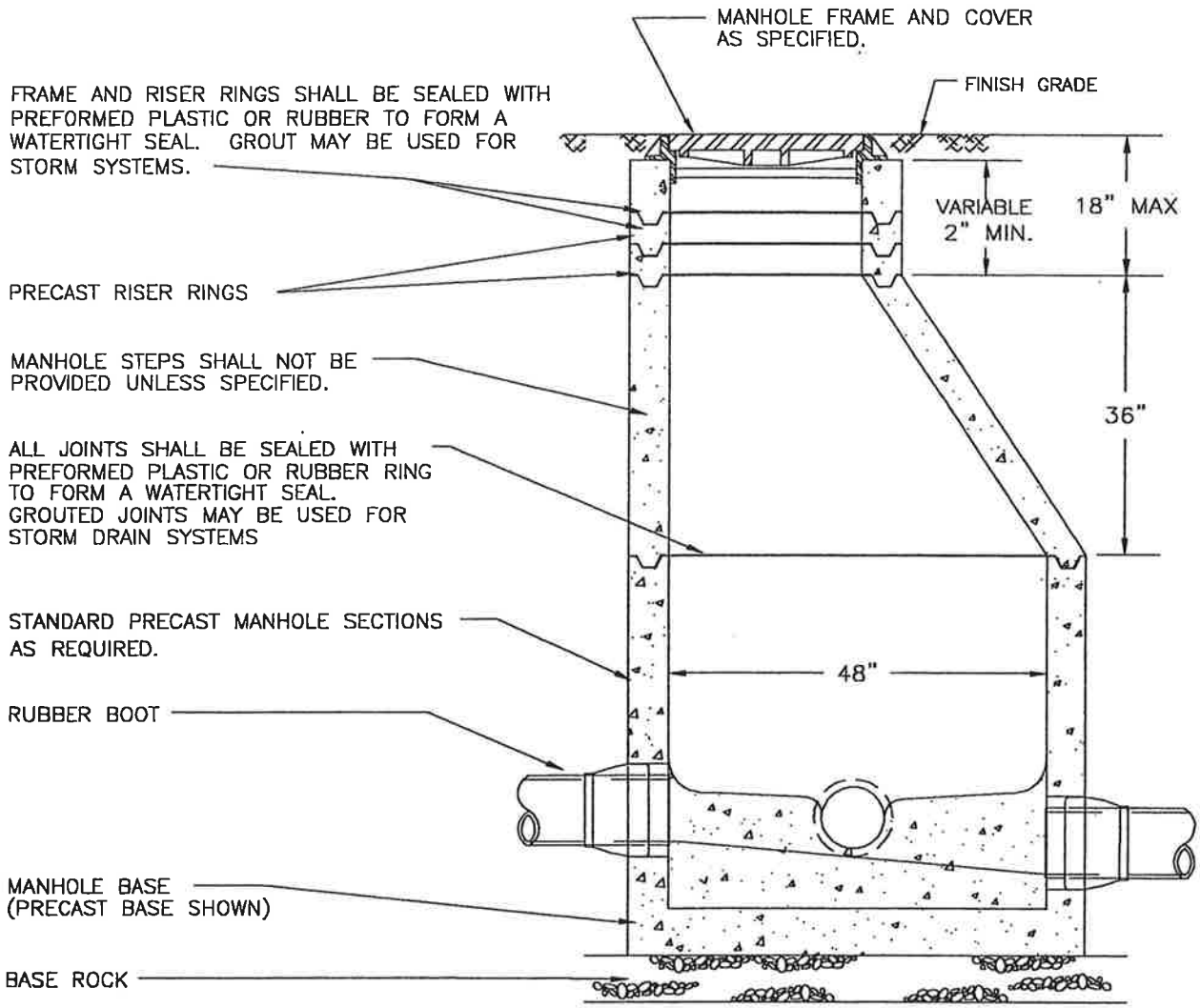

NOTES:

1. STANDARD PRECAST MANHOLE SECTION DIAMETER SHALL BE 48".
2. ALL CONNECTING PIPES SHALL HAVE A FLEXIBLE JOINT WITHIN 18" OF MANHOLE WALL.
3. SEE MANHOLE BASE SECTION DRAWING FOR BASE DETAILS.

NO.	DATE	INITIAL	REVISIONS
DESIGN:		DRAWN:	APPROVED: 2001

CITY OF EAGLE POINT ENGINEERING DEPT.

MANHOLE

SCALE: **NONE** DWG. NO. **EP–312**

EP–312.DWG

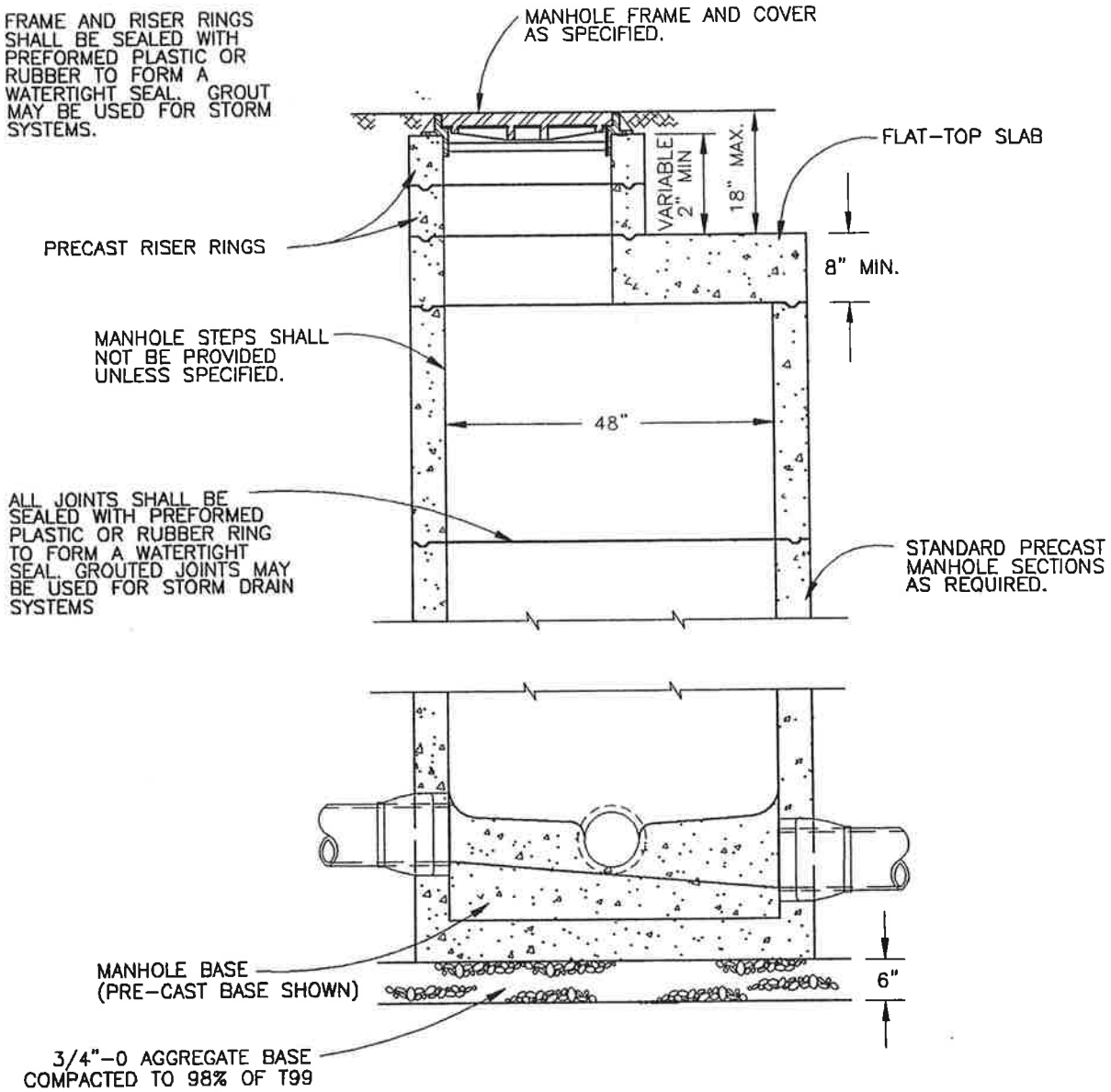

NOTES:

1. SEE MANHOLE BASE SECTION DRAWING EP-314 FOR BASE DETAILS.

NO.	DATE	INITIAL	REVISIONS
1	7/05	BWD	ADDED SLAB THICKNESS

DESIGN: DRAWN: APPROVED: 2001

CITY OF EAGLE POINT ENGINEERING DEPT.

FLAT-TOP MANHOLE

SCALE: **NONE** DWG. NO. **EP-313**

EP-313.DWG

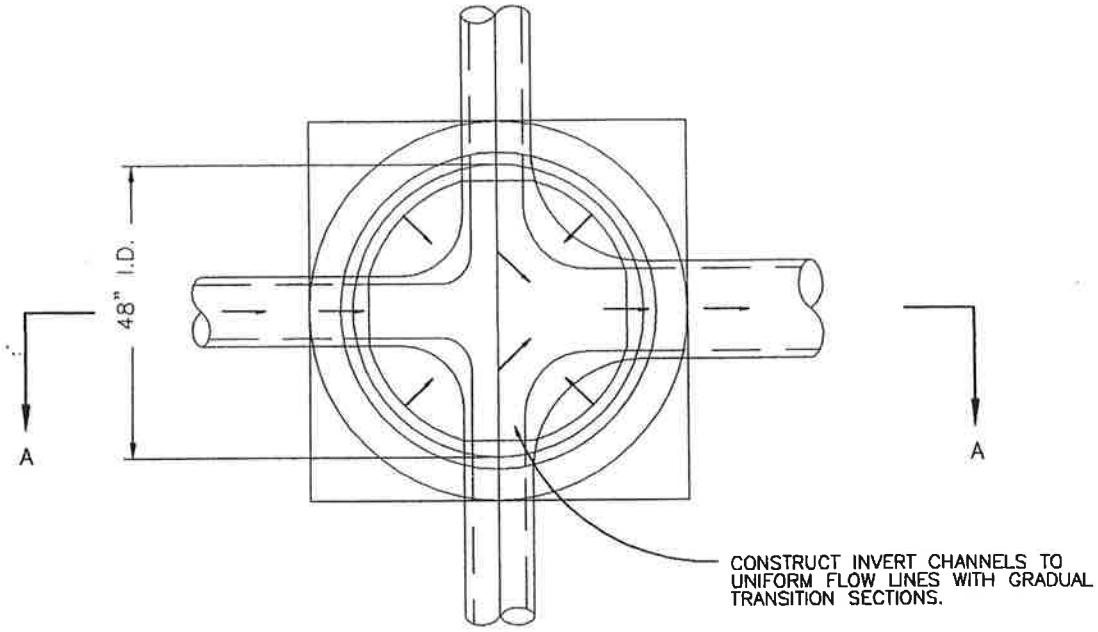

PLAN

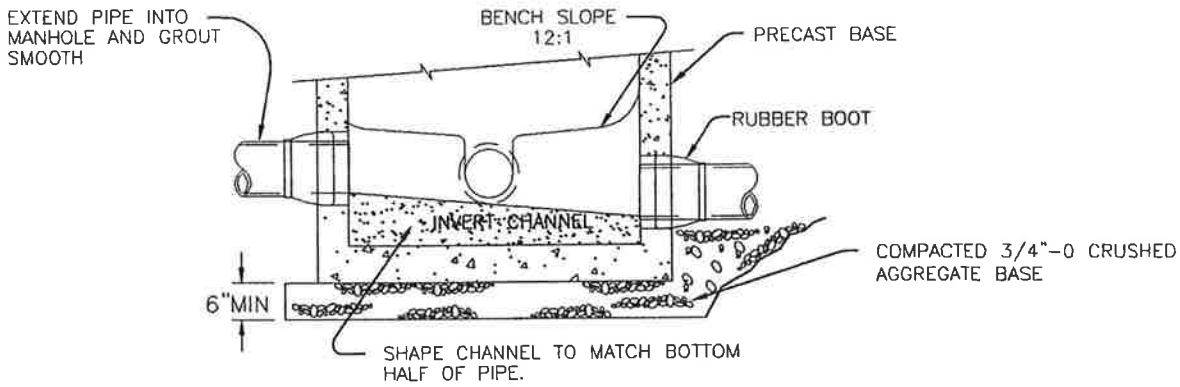

PRECAST MANHOLE BASE

SECTION A–A

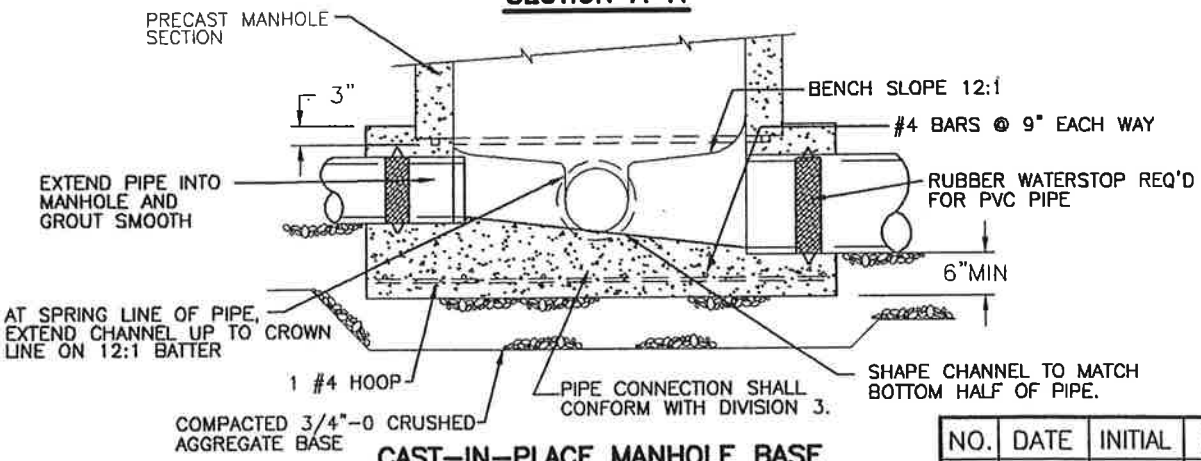

CAST–IN–PLACE MANHOLE BASE

SECTION A–A

NOTES:

1. CONCRETE SHALL BE CLASS 3300.
2. CHANNELS SHALL BE CONSTRUCTED TO PROVIDE SMOOTH SLOPES AND RADII TO OUTLET PIPE.
3. BASES MAY BE PRECAST OR POURED IN PLACE.
4. THIS MANHOLE BASE SECTION SHALL BE USED FOR PIPE SIZES UP TO 24".
5. USE RUBBER BOOTS IF PIPE IS FLEXIBLE. BOOTS MAY BE KOR–N–SEAL OR EQUIVALENT.

NO.	DATE	INITIAL	REVISIONS
1	07/05	BWD	ADDED REBAR REINFORCE-
			MENT TO CAST–IN–PLACE
			BASE

DESIGN:	DRAWN:	APPROVED: 2001

CITY OF EAGLE POINT ENGINEERING DEPT.

MANHOLE BASE SECTION

SCALE: NONE | DWG. NO. EP–314

EP-314.DWG

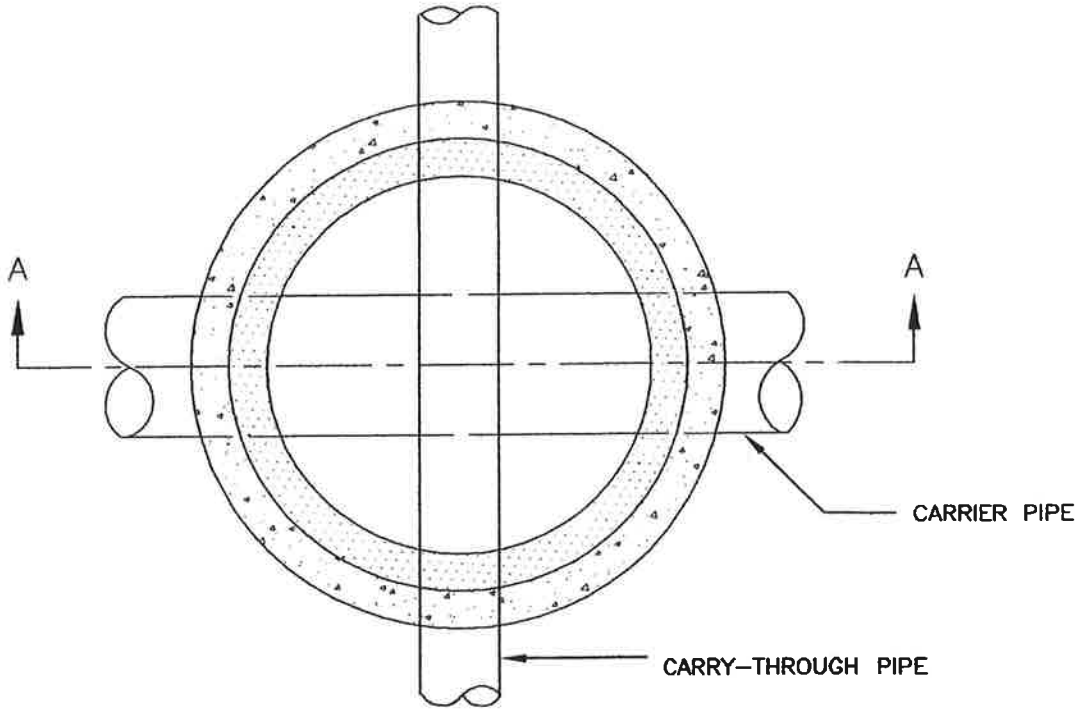

PLAN VIEW

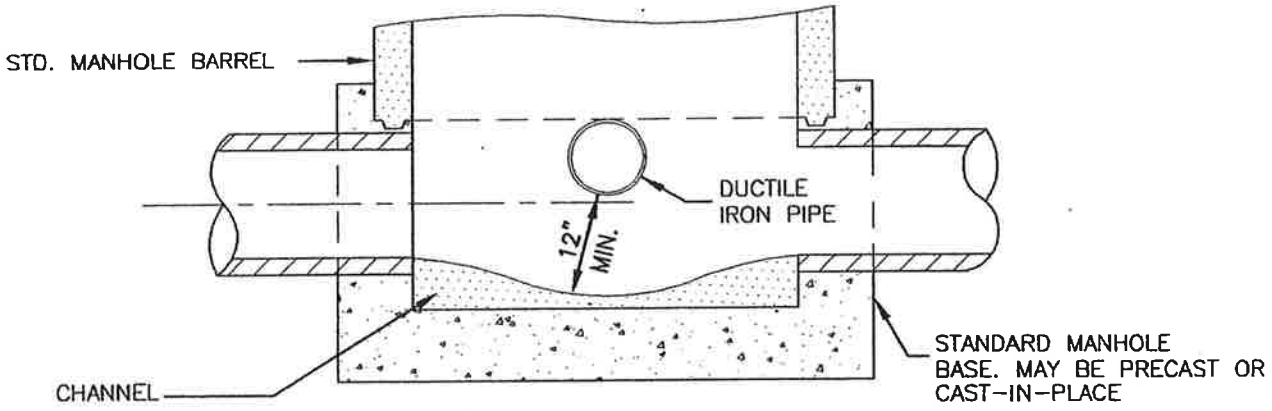

SECTION A–A

NOTES:

1. CARRY–THROUGH PIPE SHALL BE DUCTILE IRON.
2. THIS MANHOLE DESIGN SHALL BE USED ONLY AS DIRECTED BY THE CITY ENGINEER TO MITIGATE UNAVOIDABLE GRADE CONFLICTS.

NO.	DATE	INITIAL	REVISIONS
DESIGN:		DRAWN:	APPROVED: 2001

CITY OF EAGLE POINT ENGINEERING DEPT.

CARRY THROUGH MANHOLE (STORM)

SCALE: **NONE** DWG. NO. **EP–315**

EP-315.DWG

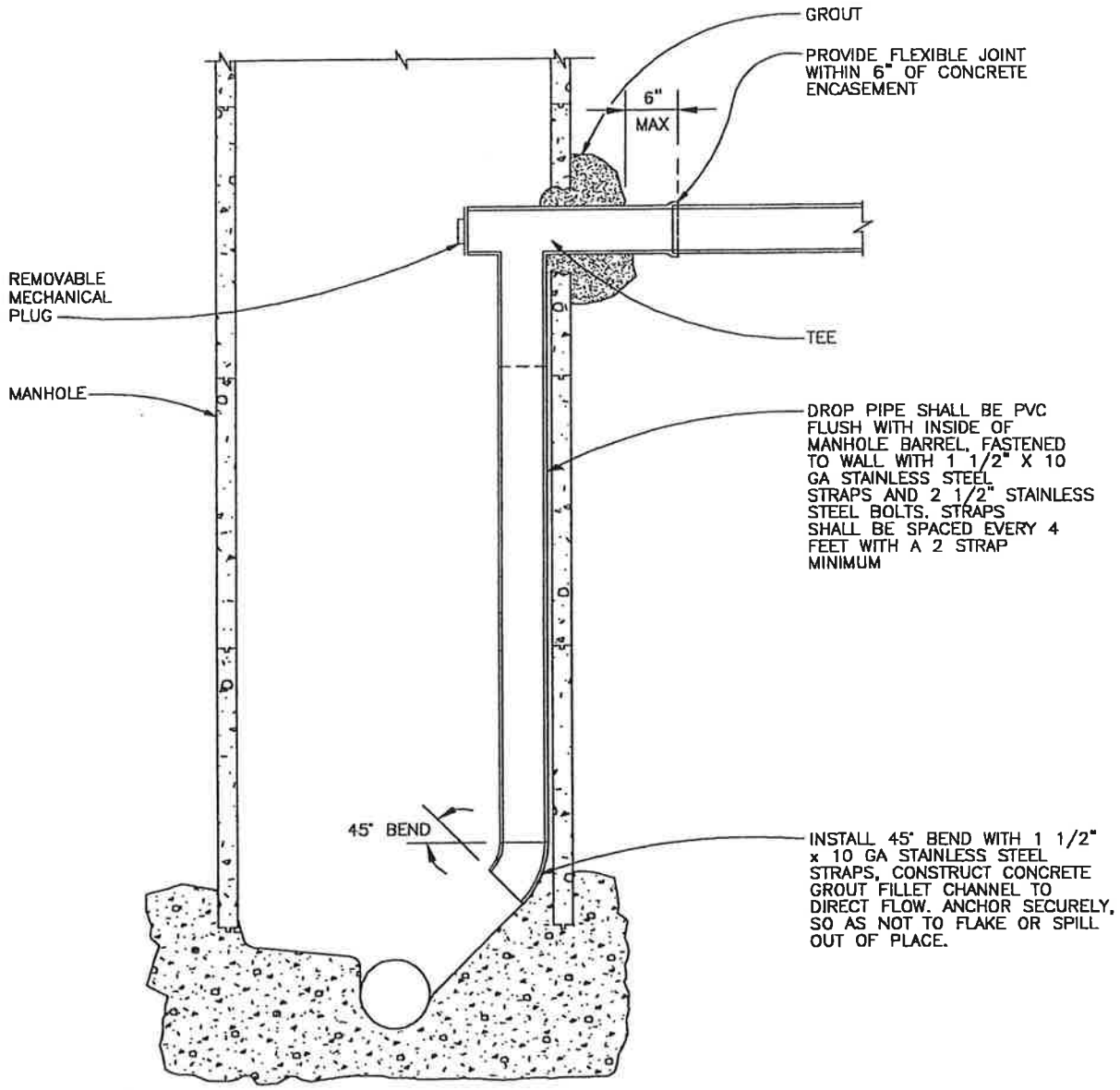

NOTES:

1. INSIDE DROP CONNECTION FOR MANHOLE ONLY ALLOWED WITH PRIOR APPROVAL OF THE CITY ENGINEER, EACH OCCURRENCE.
2. ONLY ONE INSIDE DROP CONNECTION ALLOWED PER MANHOLE.
3. MINIMUM MANHOLE DIAMETER WITH DROP CONNECTION SHALL BE 48-INCHES.
4. MAXIMUM DROP PIPE DIAMETER SHALL BE 8-INCHES.

NO.	DATE	INITIAL	REVISIONS
DESIGN:		DRAWN:	APPROVED: 2001

CITY OF EAGLE POINT ENGINEERING DEPT.

DETAIL FOR INSIDE DROP CONNECTION FOR MANHOLES

SCALE: NONE | DWG. NO. EP-316

EP-316.DWG

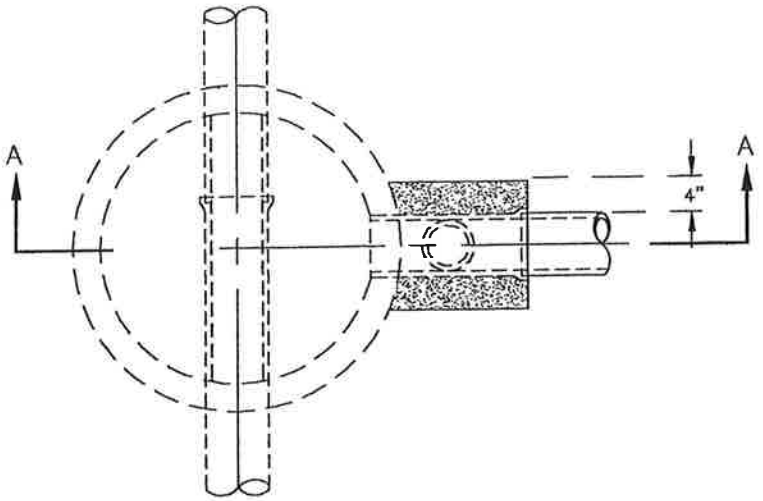

PLAN

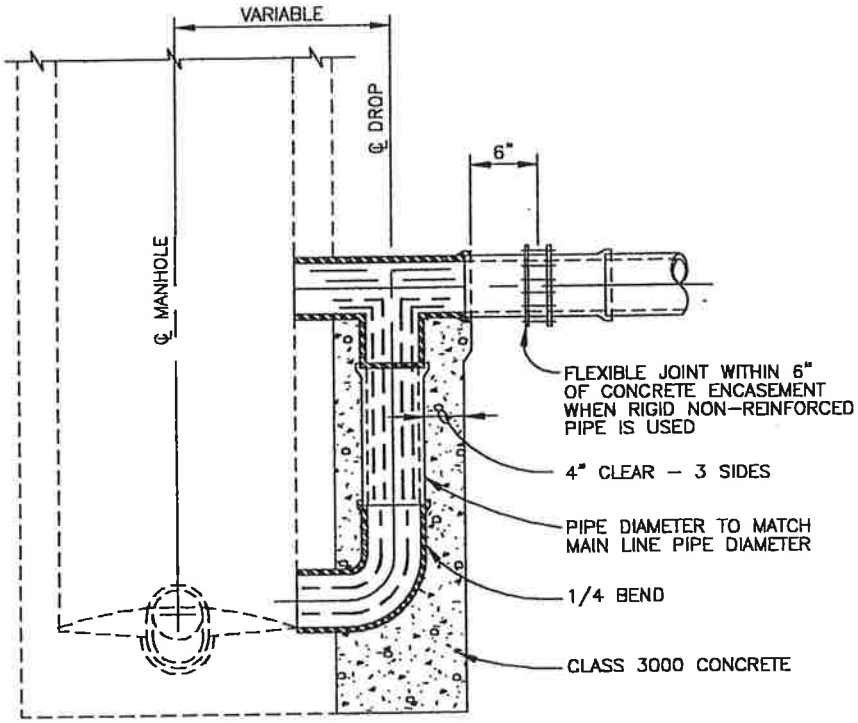

SECTION A–A

NO.	DATE	INITIAL	REVISIONS
DESIGN:		DRAWN:	APPROVED: 2001

CITY OF EAGLE POINT
ENGINEERING DEPT.

DETAIL FOR OUTSIDE DROP CONNECTION FOR MANHOLES

SCALE: **NONE** | DWG. NO. **EP–317**

EP-317.DWG

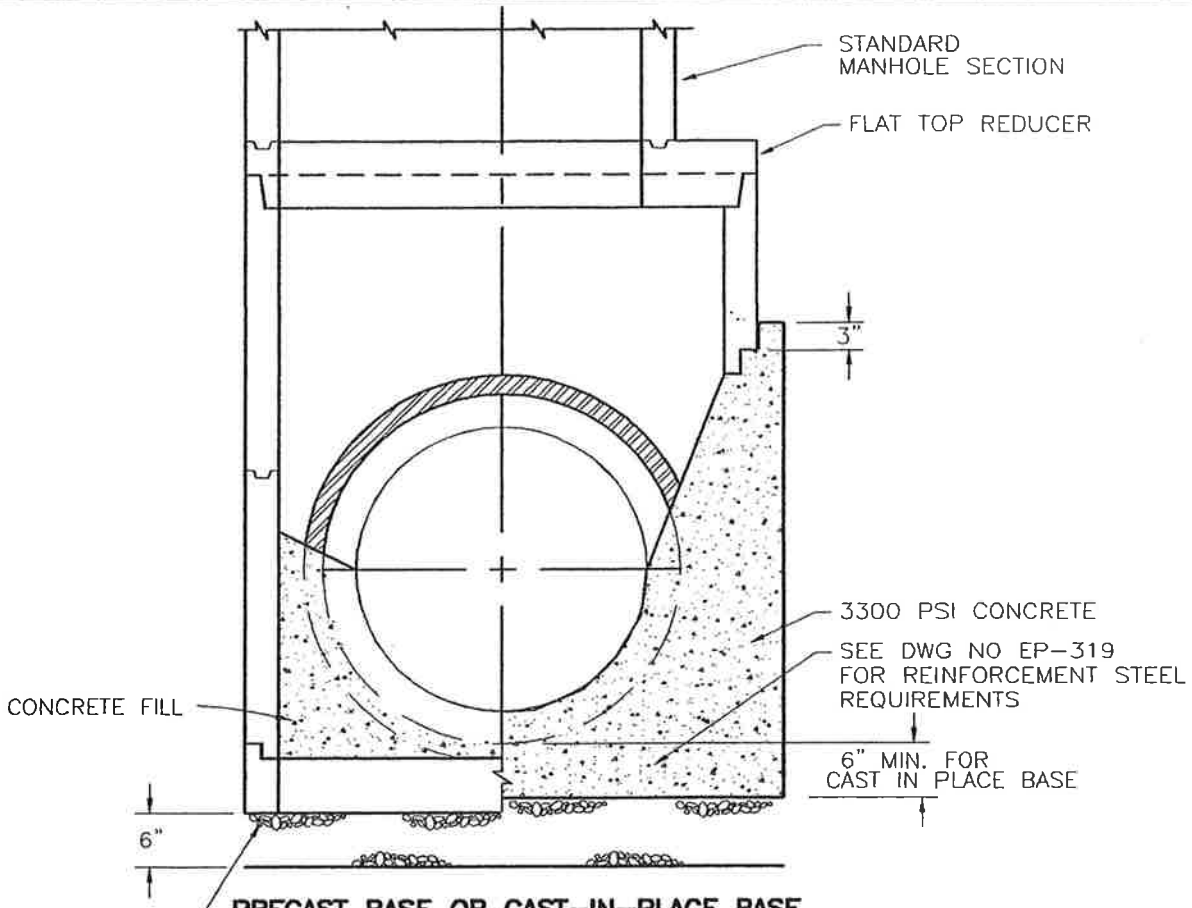

PRECAST BASE OR CAST-IN-PLACE BASE

SECTION A-A

NOTES:

1. MANHOLES MAY HAVE EITHER PRECAST OR CAST-IN-PLACE BASES.
2. MANHOLE SECTIONS SHALL BE MANUFACTURED IN ACCORDANCE WITH C478.
3. LARGE MANHOLE BASES SHALL BE USED FOR PIPE SIZES LARGER THAN 24".
4. MINIMUM BASE INSIDE DIAMETER SHALL BE BASED ON THE NUMBER AND SIZE OF THE PIPES ENTERING THE MANHOLE, THE ELEVATION OF THE PIPES, AND THE MINIMUM SPACING BETWEEN THE PIPES.

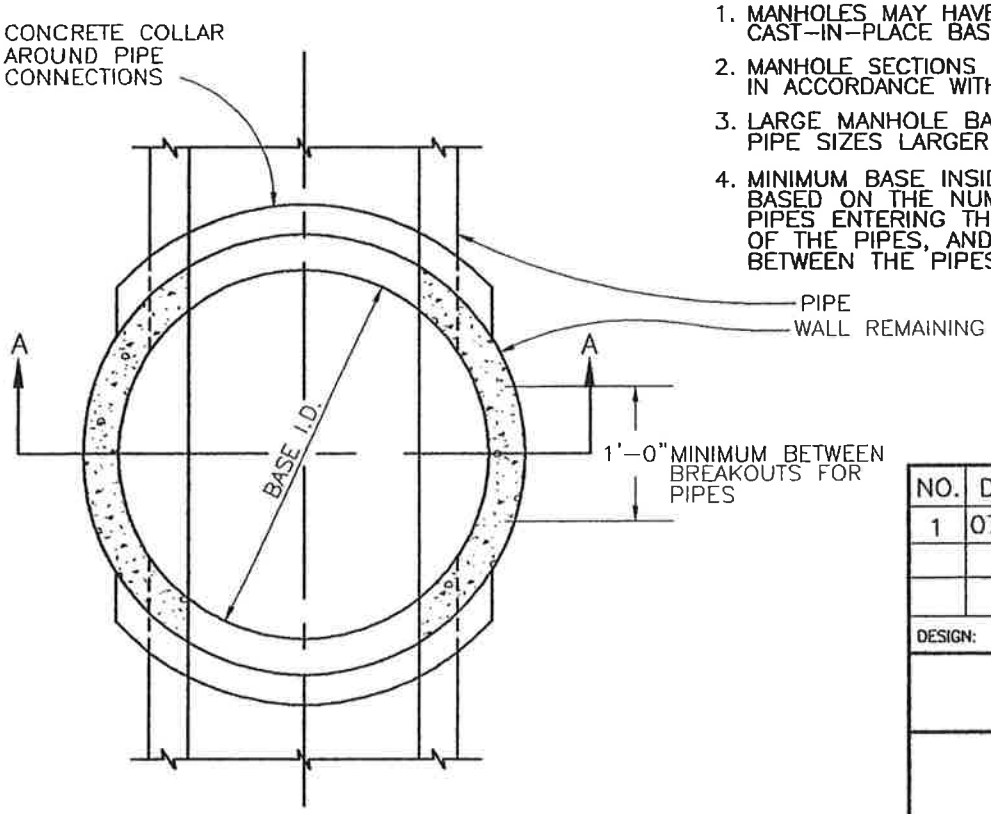

PLAN

NO.	DATE	INITIAL	REVISIONS
1	07/05	BWD	COMPACTION REQ.

DESIGN: | DRAWN: | APPROVED: 2001

CITY OF EAGLE POINT ENGINEERING DEPT.

LARGE CONCRETE MANHOLE BASE

SCALE: **NONE** | DWG. NO. **EP-318**

EP-318.DWG

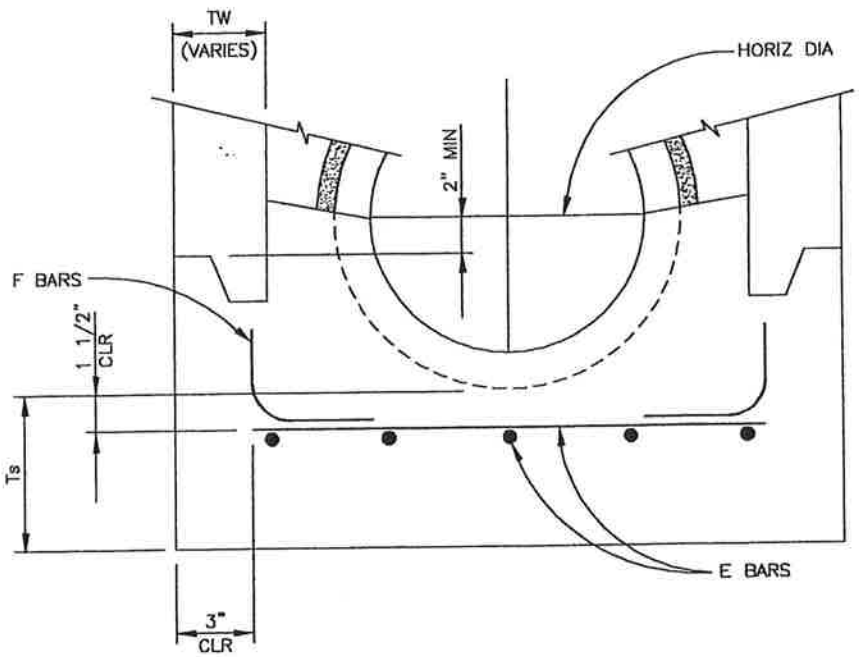

CAST-IN-PLACE BASE

BASE I.D.		60"		72"		84"		96"	
TYPE	DEPTH*	0'-15'	15'-30'	0'-15'	15'-30'	0'-15'	15'-30'	0'-15'	15'-30'
CAST IN PLACE	Ts	7.0"	9.0"	7.0"	9.0"	8.0"	10.0"	9.0"	11.0"
	E BARS	#4 @ 12"	#4 @ 9"	#4 @ 9"	#4 @ 6"	#4 @ 8"	#5 @ 9"	#4 @ 7"	#5 @ 8"
	F BARS	#4 @ 12"	#4 @ 9"	#4 @ 9"	#4 @ 6"	#4 @ 8"	#5 @ 9"	#4 @ 7"	#5 @ 8"

*INVERT TO STREET GRADE

NOTE:
CONCRETE SHALL BE CLASS 3300. STEEL fg = GRADE 60.

NO.	DATE	INITIAL	REVISIONS

DESIGN: DRAWN: APPROVED: 2001

CITY OF EAGLE POINT
ENGINEERING DEPT.

LARGE CAST-IN-PLACE
CONCRETE MANHOLE BASE

SCALE: NONE DWG. NO. EP-319

EP-319.DWG

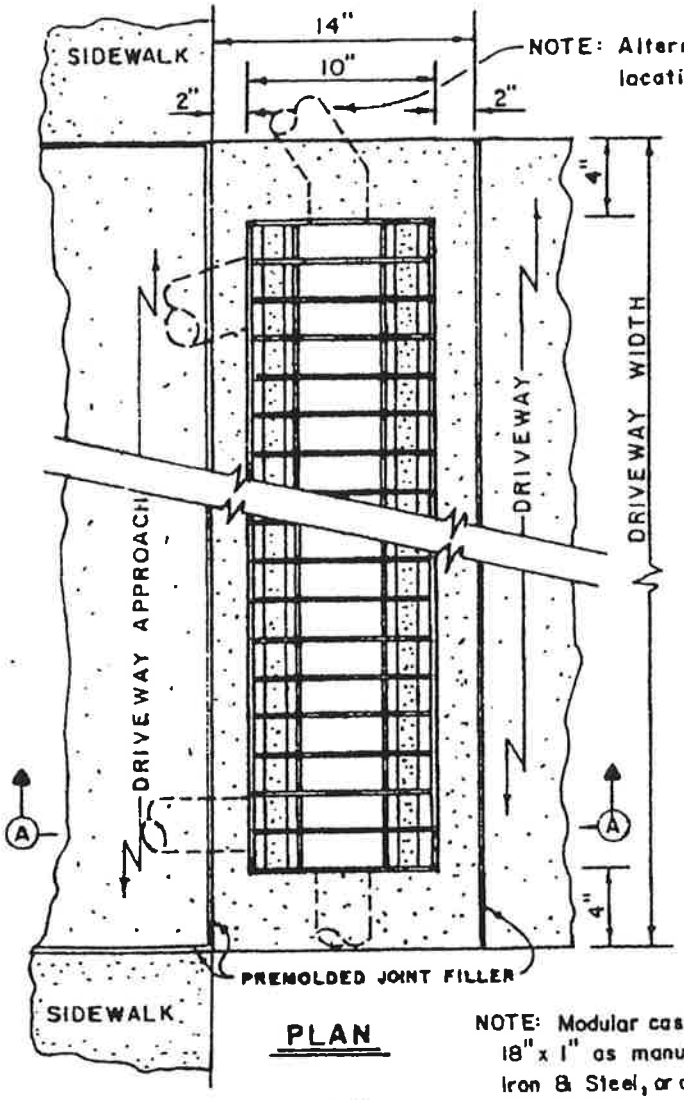

PLAN

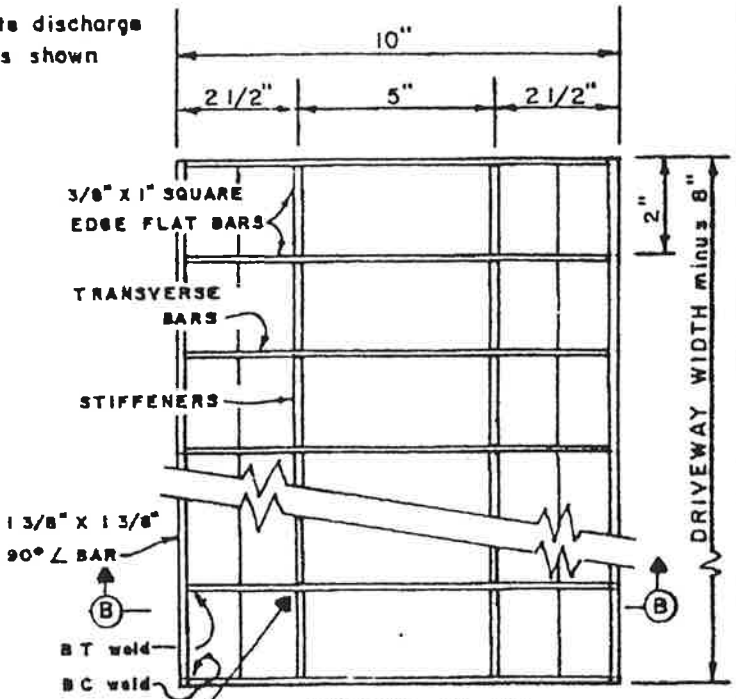

GRATE PLAN

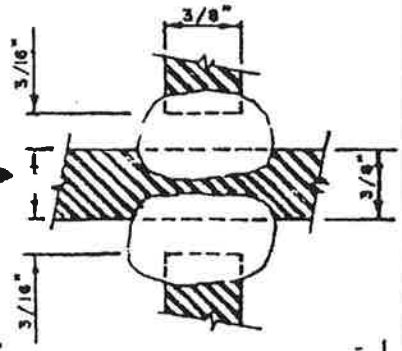

NOTE: Modular cast iron grate 10" x 18" x 1" as manufactured by Valley Iron & Steel, or an approved equal may be substituted for steel fabricated grate.

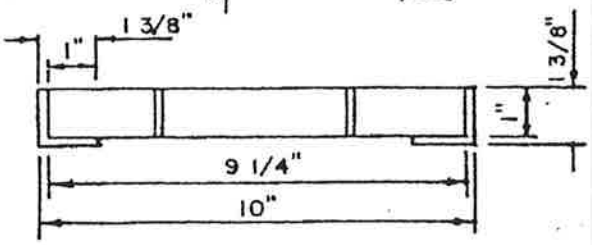

SECTION B-B

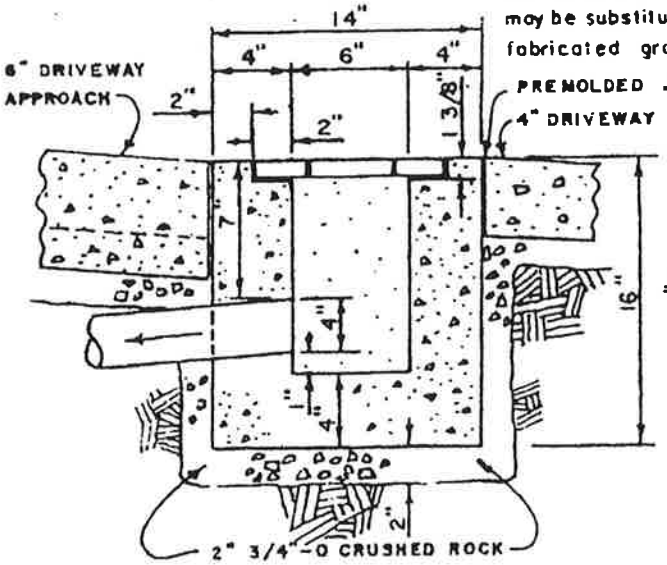

SECTION A-A

NOTES:

1. PLACE DRAIN PIPE AS REQUIRED TO DISCHARGE DRAINAGE TO STREET OR DRAINAGE WAY.
2. CONCRETE SHALL BE CLASS 3300 – 3/4" 0.54 W/C RATIO
3. GRATE SHALL BE A36 STEEL, GALVANIZED AND FABRICATED AS SHOWN

NO.	DATE	INITIAL	REVISIONS
DESIGN:		DRAWN:	APPROVED: 2001

CITY OF EAGLE POINT ENGINEERING DEPT.

STANDARD RIBBON DRAIN DETAIL

SCALE: NONE | DWG. NO. EP–320

EP–320.DWG

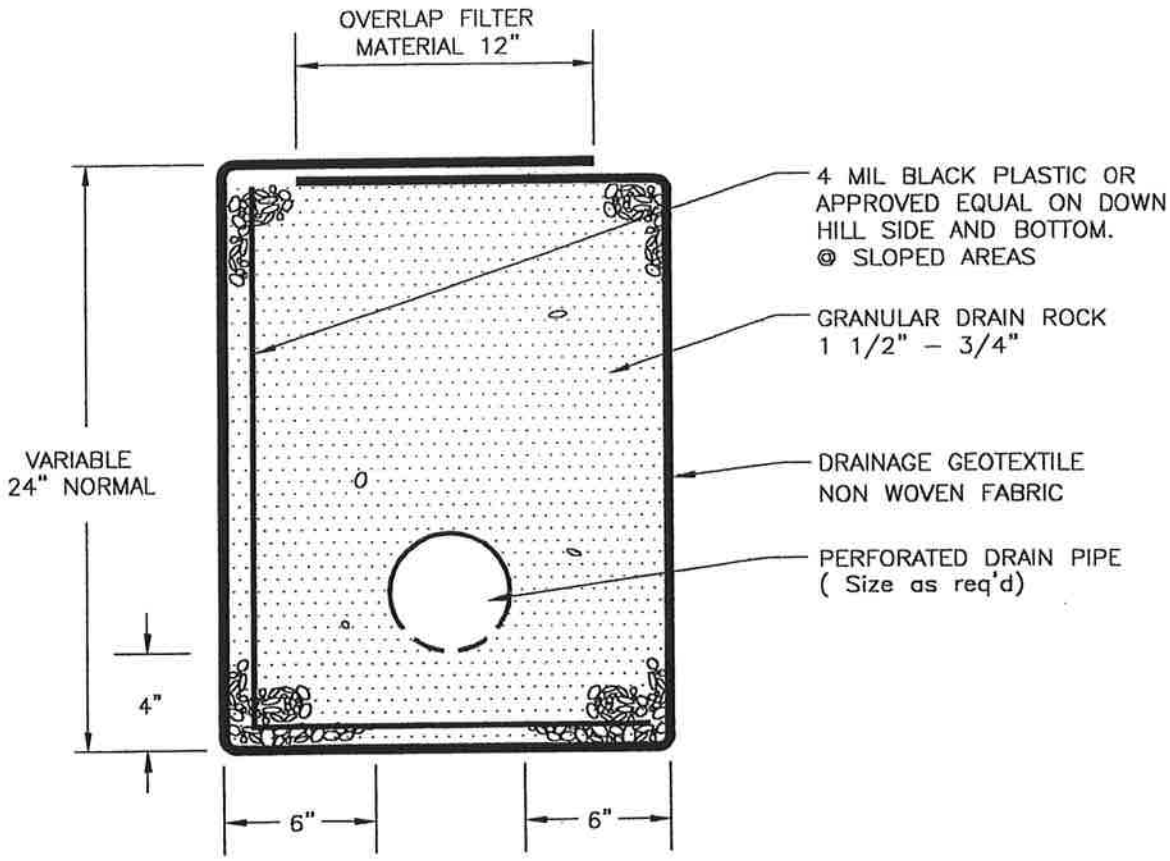

NO.	DATE	INITIAL	REVISIONS
DESIGN:		DRAWN:	APPROVED: 2001

CITY OF EAGLE POINT
ENGINEERING DEPT.

SUBSURFACE DRAIN DETAIL

SCALE: **NONE** | DWG. NO. **EP–321**

EP–321.DWG

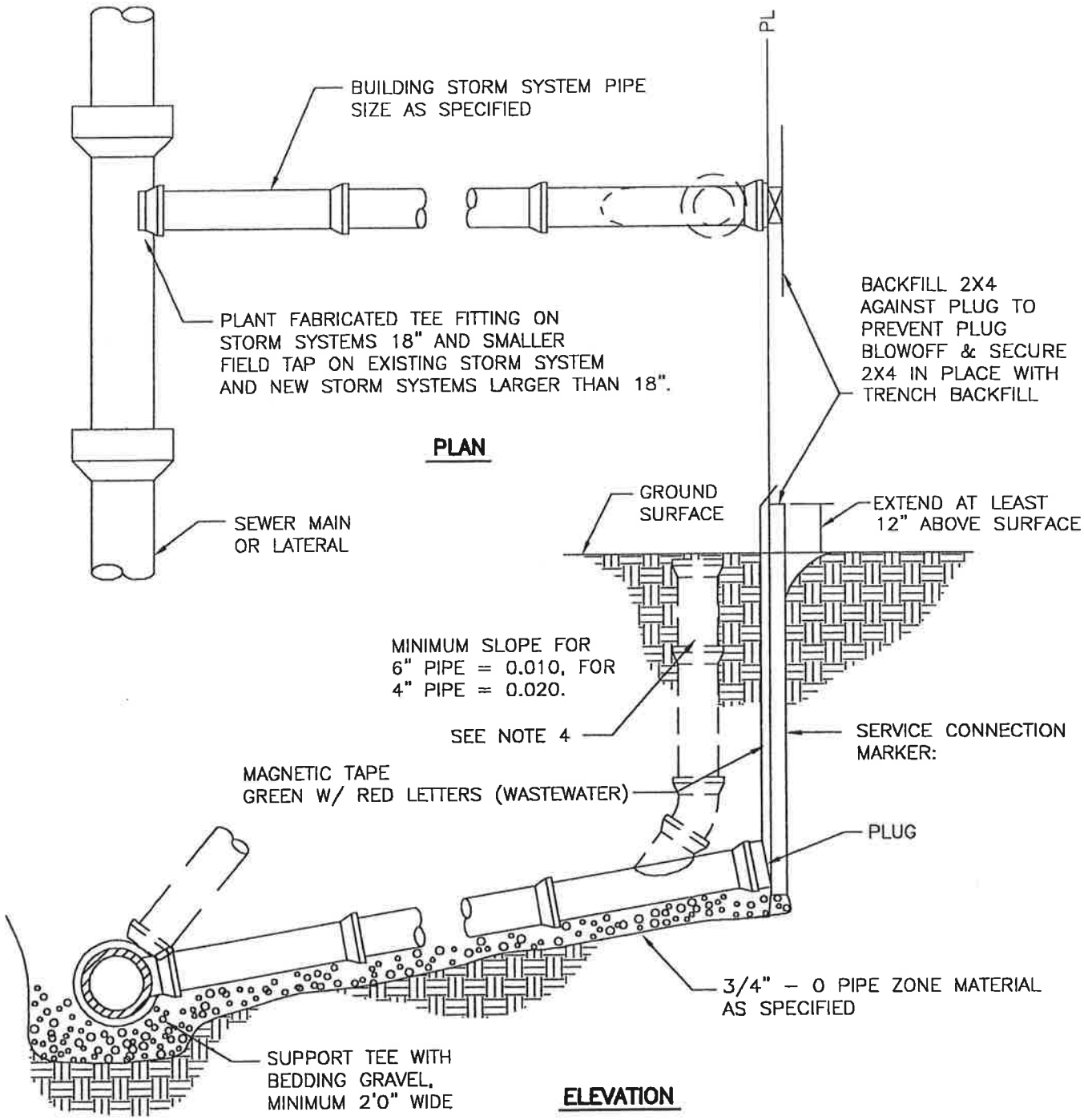

NOTES:

1. PIPE AND FITTINGS SHALL BE COMPATIBLE. ONLY MANUFACTURED FITTINGS SHALL BE USED.
2. MINIMUM DEPTH AT RIGHT OF WAY OR EASEMENT LINE SHALL BE 4 FEET.
3. MARKER POSTS AND BLOCKING SHALL BE TREATED WOOD. POST SHALL BE 2" x 4" FIR. POST TO EXTEND 12" MINIMUM ABOVE FINISH GRADE AND EXPOSED AREA SHALL BE PAINTED WHITE.
4. WHEN REQUIRED, A CLEANOUT SHALL BE INSTALLED.
5. LAY BUILDING STORM SYSTEM AT MAX. 45° FROM HORIZONTAL TO ACHIEVE REQUIRED DEPTH AT PROPERTLY LINE WHEN MINIMUM SLOPE RESULTS IN EXCESSIVE DEPTH.

NO.	DATE	INITIAL	REVISIONS
DESIGN:		DRAWN:	APPROVED: 2001

CITY OF EAGLE POINT ENGINEERING DEPT.

SHALLOW TRENCH SERVICE CONNECTION, BLOCKING AND MARKERS

SCALE: NONE | DWG. NO. EP–322

EP–322.DWG

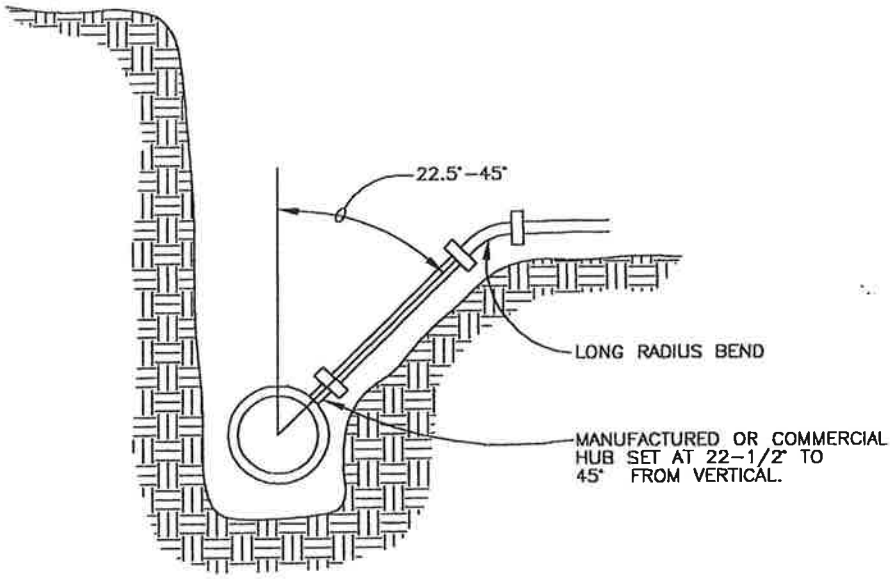

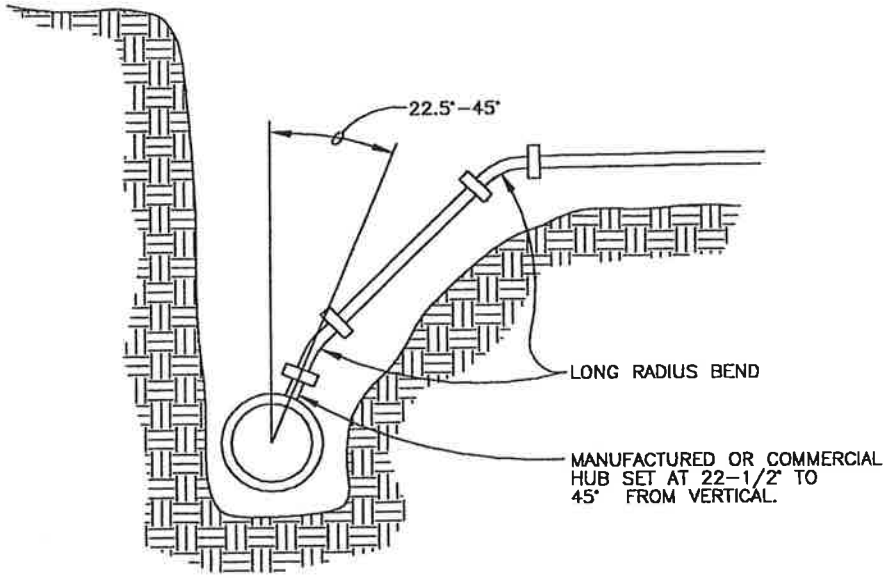

NOTES:

1. PIPE AND FITTINGS SHALL BE COMPATIBLE. ONLY MANUFACTURED FITTINGS SHALL BE USED.
2. MINIMUM DEPTH AT RIGHT OF WAY OR EASEMENT LINE SHALL BE 4 FEET.
3. PLUGGING, BLOCKING, AND MARKING OF UNCONNECTED SERVICES SHALL CONFORM TO SHALLOW TRENCH SERVICE CONNECTION DRAWING.
4. VERTICAL TRENCH WALLS ARE REQUIRED. IF IT IS NOT POSSIBLE TO MAINTAIN VERTICAL TRENCH WALLS, USE ALTERNATE CONNECTION METHOD TO MAINTAIN 6" MAXIMUM DISTANCE BETWEEN RISER PIPE AND TRENCH WALLS. REPLACE ALL EXCAVATED OR DISTURBED MATERIAL WITH FULL DEPTH GRANULAR BACKFILL COMPACTED TO 95% RELATIVE DENSITY.
5. WHERE DEEP CONNECTION IS AT AN ANGLE LESS THAN 45° FROM VERTICAL, DUCTILE IRON PIPE AND FITTINGS SHOULD BE USED.

NO.	DATE	INITIAL	REVISIONS
DESIGN:		DRAWN:	APPROVED: 2001

CITY OF EAGLE POINT ENGINEERING DEPT.

TYPICAL DEEP TRENCH SERVICE CONNECTION

SCALE: NONE | DWG. NO. EP–323

EP–323.DWG

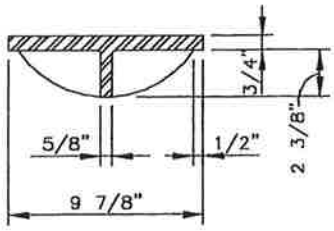

CAST IRON COVER

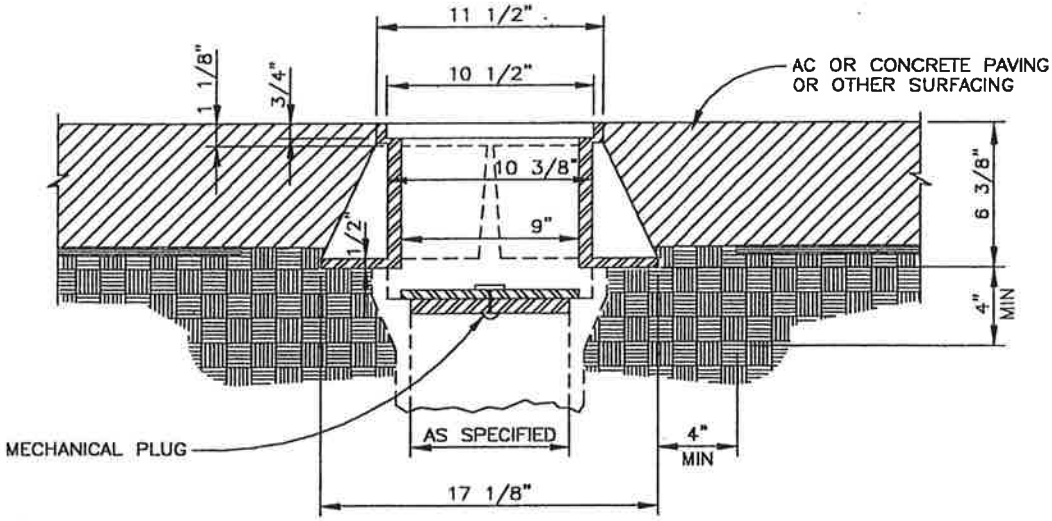

CAST IRON FRAME

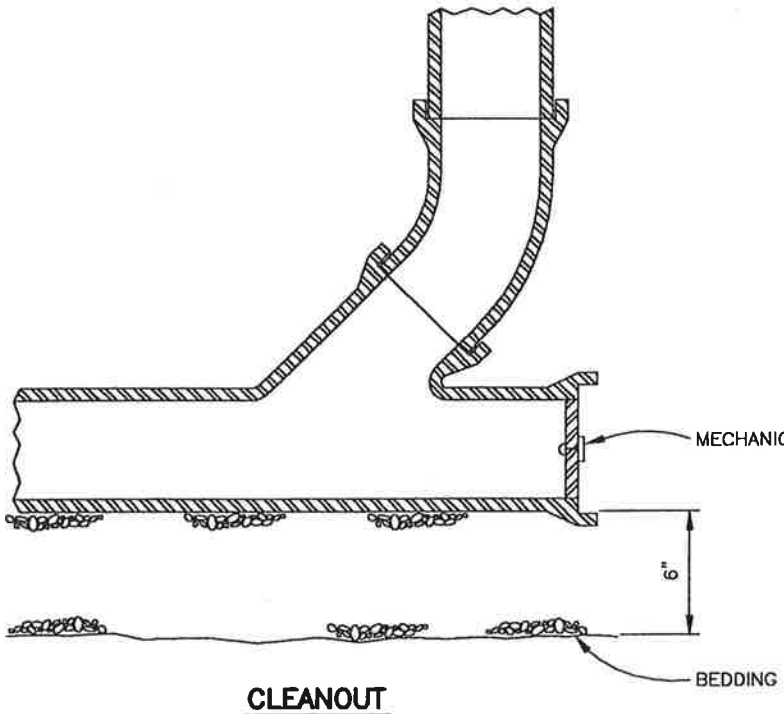

CLEANOUT

NOTES:
ALL CLEANOUT MATERIAL TO BE SAME AS CARRIER PIPE.

NO.	DATE	INITIAL	REVISIONS
DESIGN:		DRAWN:	APPROVED: 2001

CITY OF EAGLE POINT ENGINEERING DEPT.

CLEANOUT

SCALE: **NONE** DWG. NO. **EP-324**

EP-324.DWG

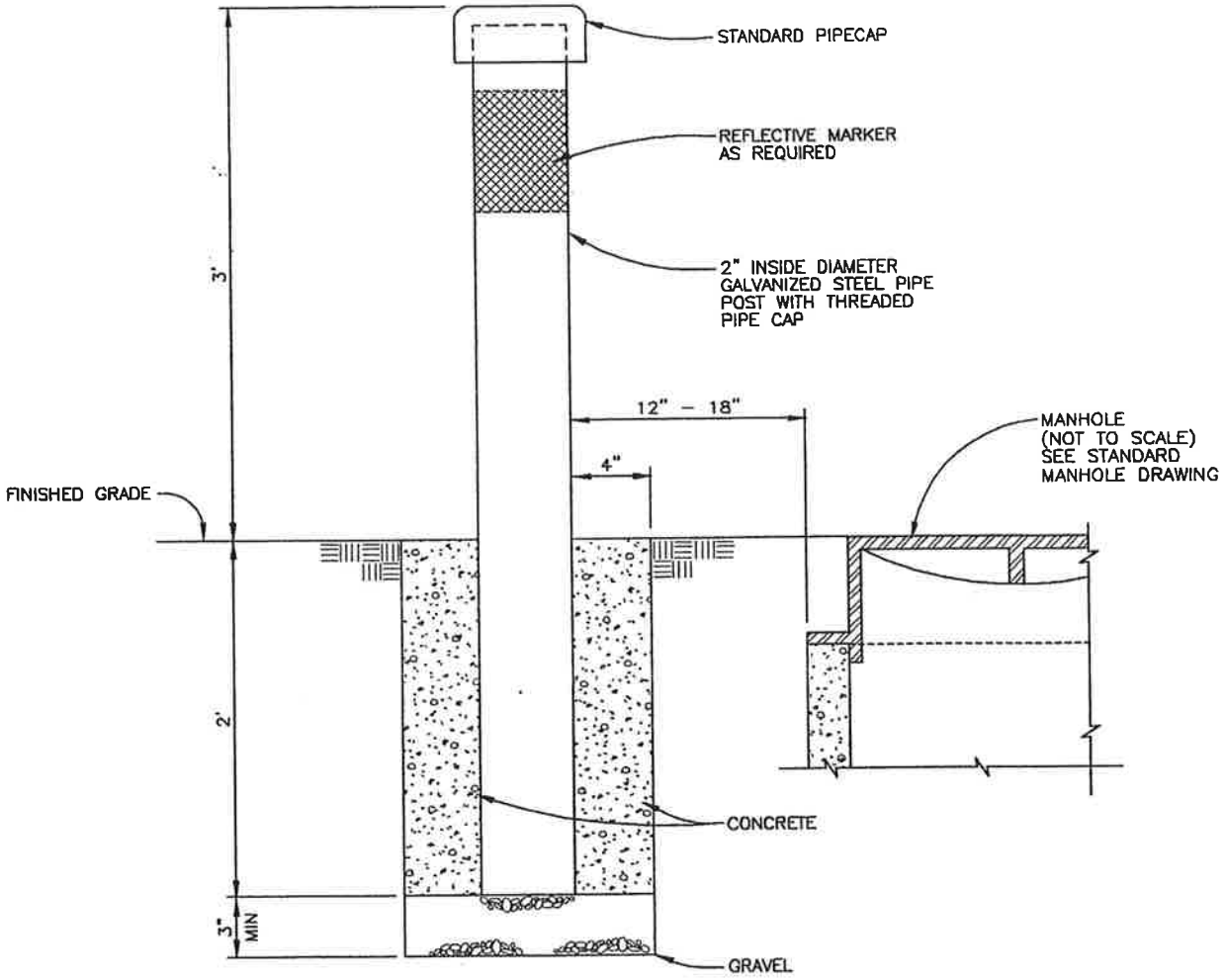

MARKER POST AT MANHOLE OR CLEANOUT

NOTES:

1. AS DIRECTED THE POST SHALL BE LOCATED ON THE STRAIGHT SIDE OF MANHOLE CONE.
2. POSTS SHALL BE SET IN CONCRETE.
3. AS AN ALTERNATIVE, A TREATED 4 x 4 POST OR 4" CONCRETE FILLED PVC PIPE POST MAY BE USED, IF APPROVED.
4. POSTS SHALL BE PAINTED WHITE.

NO.	DATE	INITIAL	REVISIONS
DESIGN:		DRAWN:	APPROVED: 2001

CITY OF EAGLE POINT
ENGINEERING DEPT.

MARKER POST

SCALE: NONE | DWG. NO. EP-325

EP-325.DWG

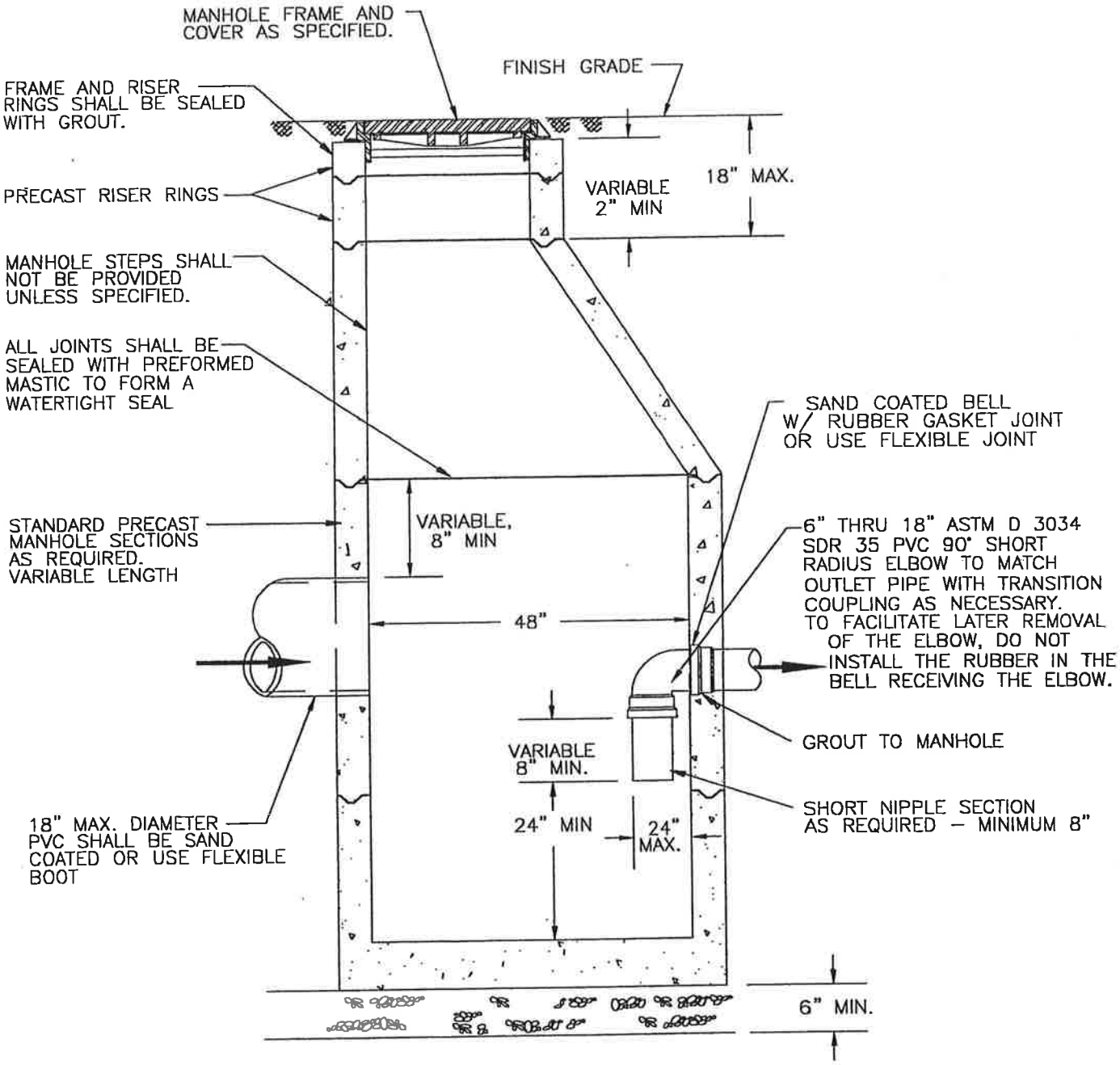

NO.	DATE	INITIAL	REVISIONS
DESIGN:		DRAWN:	APPROVED: 2001

CITY OF EAGLE POINT ENGINEERING DEPT.

POLLUTION CONTROL MANHOLE WITH ELBOW

SCALE: **NONE** DWG. NO. **EP–326**

NOTES:

1. STANDARD PRECAST MANHOLE SECTION DIAMETER MAY BE 42" IF DIRECTED BY ENGINEER.
2. ALL PRECAST SECTIONS SHALL CONFORM TO REQUIREMENTS OF ASTM C 478.
3. ALL CONNECTING PIPE SHALL HAVE A FLEXIBLE JOINT WITHIN 18" OF MANHOLE WALL.

EP–326.DWG

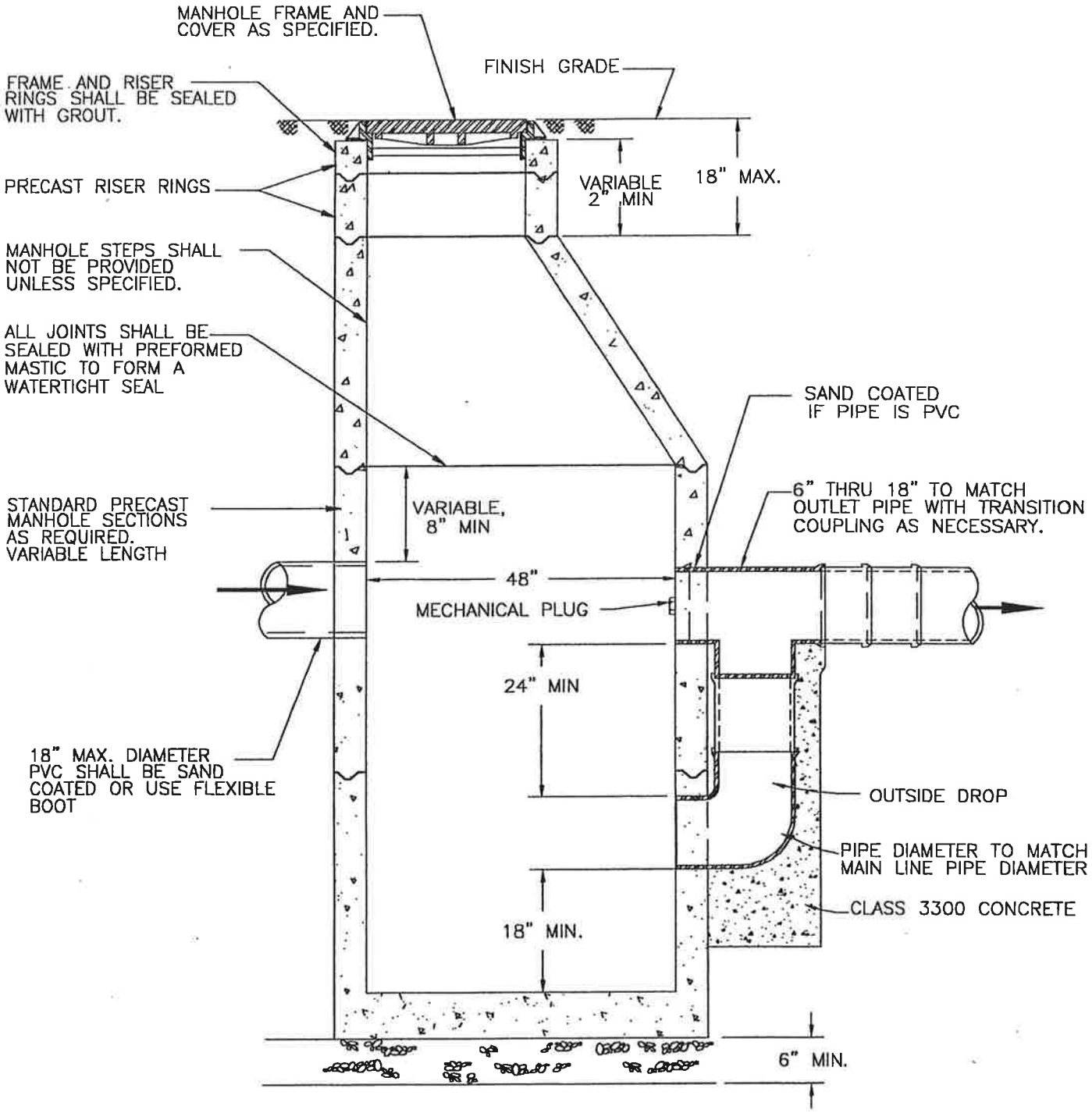

NOTES:

1. STANDARD PRECAST MANHOLE SECTION DIAMETER MAY BE 42" IF DIRECTED BY ENGINEER.
2. ALL PRECAST SECTIONS SHALL CONFORM TO REQUIREMENTS OF ASTM C 478.
3. ALL CONNECTING PIPE SHALL HAVE A FLEXIBLE JOINT WITHIN 18" OF MANHOLE WALL. IF THE PIPE IS PVC, IT SHALL BE EPOXY-SAND COATED WHERE IT IS GROUTED INTO THE MANHOLE.
4. CONSTRUCT OUTSIDE DROP PER THE DETAIL FOR 'OUTSIDE DROP CONNECTION FOR MANHOLES.'

NO.	DATE	INITIAL	REVISIONS
DESIGN:		DRAWN:	APPROVED: 2001

CITY OF EAGLE POINT ENGINEERING DEPT.

POLLUTION CONTROL MANHOLE WITH OUTSIDE DROP

SCALE: NONE | DWG. NO. EP-327

EP-327.DWG

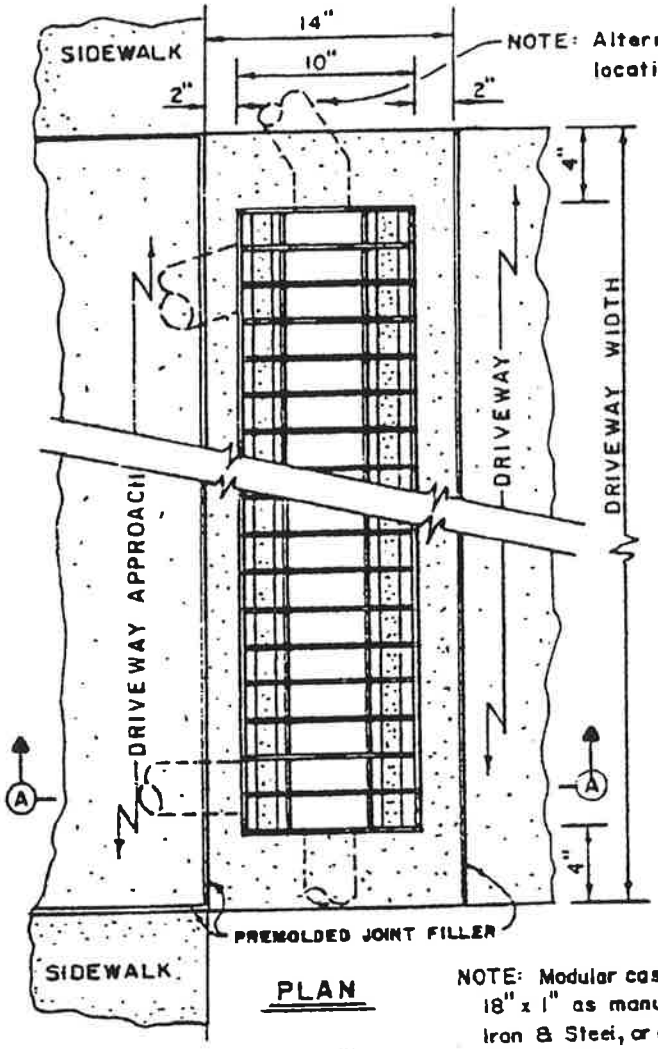

PLAN

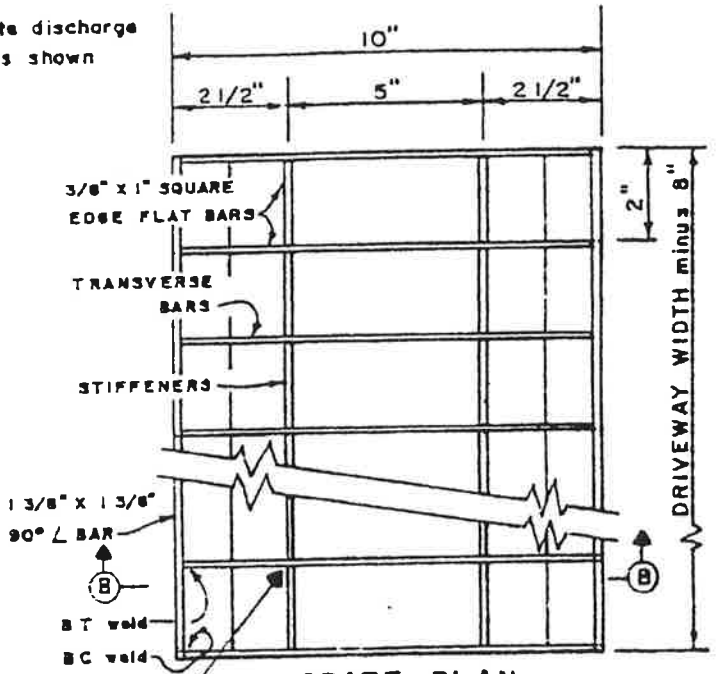

GRATE PLAN

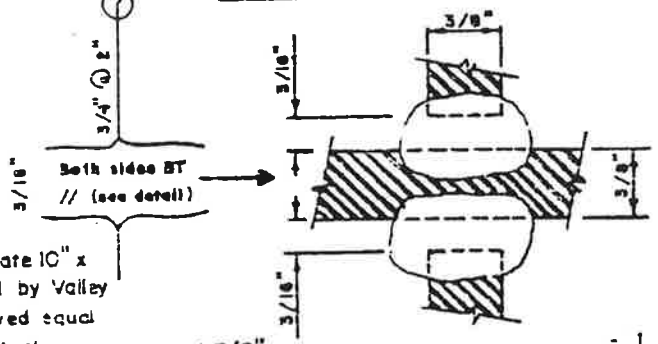

NOTE: Modular cast iron grate 10" x 18" x 1" as manufactured by Valley Iron & Steel, or an approved equal may be substituted for steel fabricated grate.

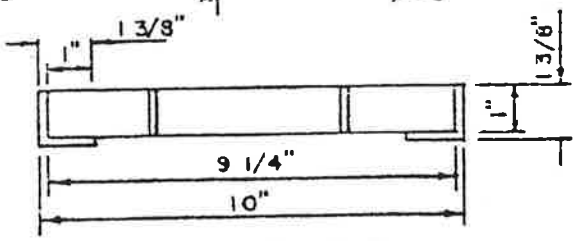

SECTION B-B

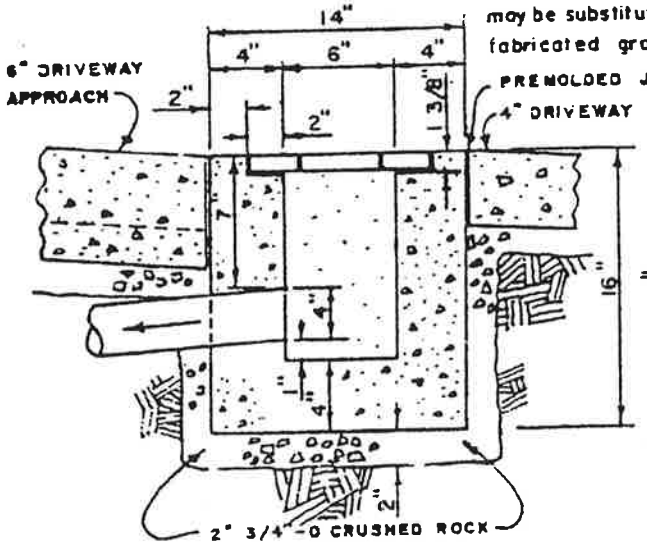

SECTION A-A

NOTES:

1. Place drain pipe as required to discharge drainage to street or drainage way.
2. Concrete shall be minimum 3000 p.s.i. @ 28 days with a maximum 3" slump.
3. Grate shall be A36 steel, galvanized and fabricated as shown

NO.	DATE	INITIAL	REVISIONS
DESIGN:		DRAWN:	APPROVED: 2001

CITY OF EAGLE POINT
ENGINEERING DEPT.

RIBBON DRAIN

SCALE: NONE | DWG. NO. EP-328

EP-328.DWG

SANITARY SEWER DETAILS:

PLEASE SEE ROGUE VALLEY SEWER SERVICE (R.V.S.)
FOR ALL DETAILS, SPECIFICATIONS, PERMITS, INSPECTIONS, AND APPROVALS, RELATING TO SANITARY SEWER CONSTRUCTION.

INDX.DWG